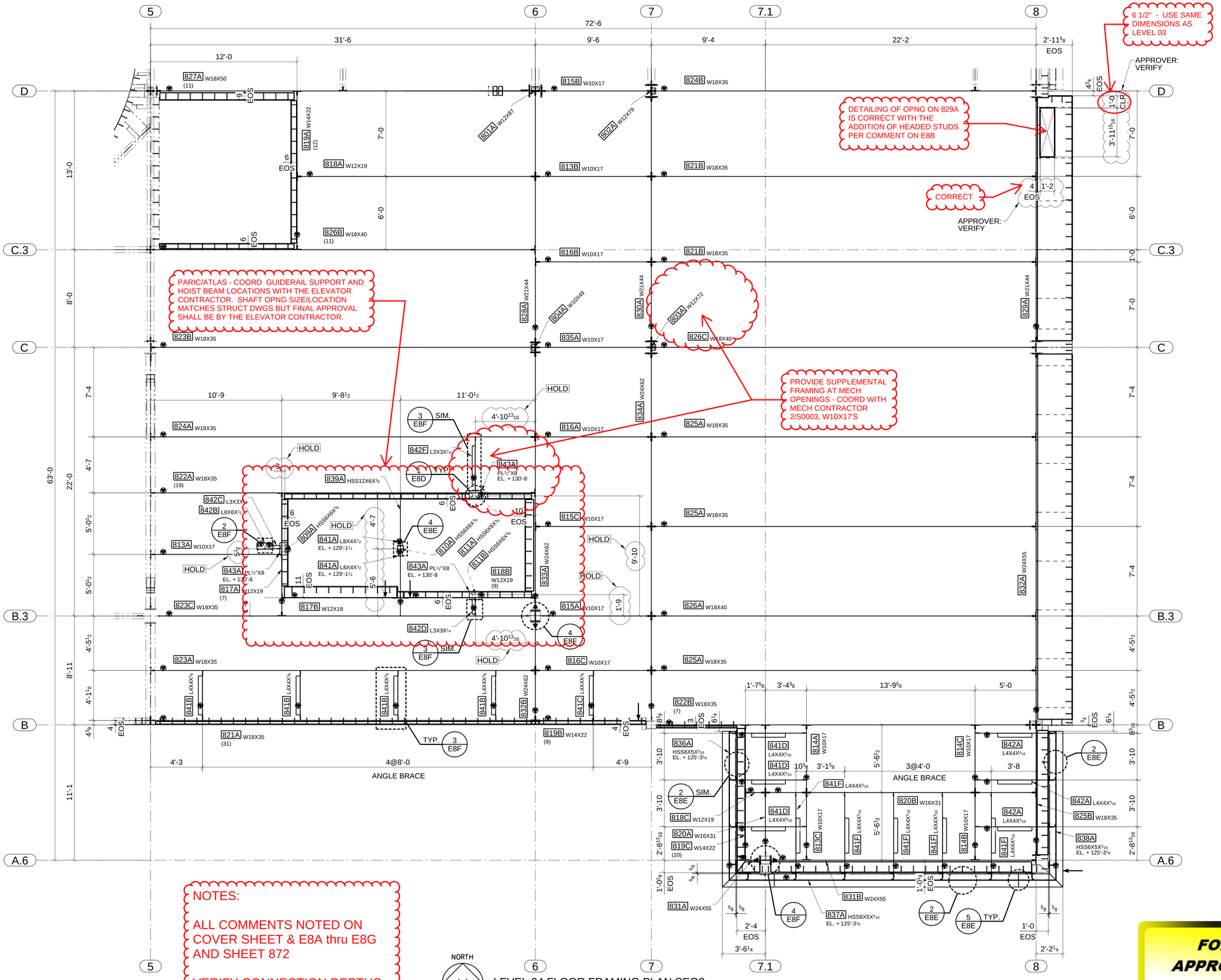

LEVEL 04 FLOOR FRAMING PLAN SEQ8

T.O.S. EL. +130'-1 1/2 (UNO)

REF: S0105

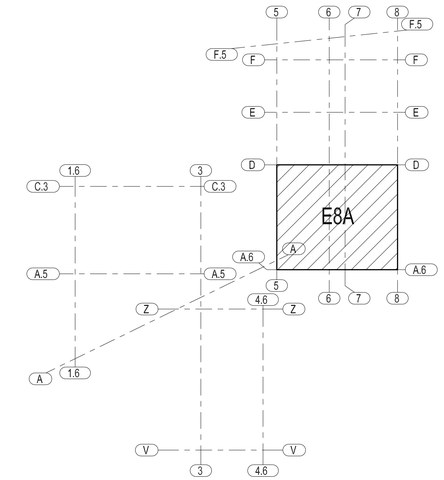

KEY PLAN AT 130'-1 1/2"

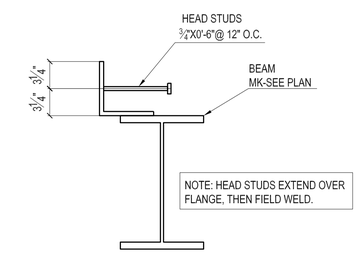

HEAD STUDS FIELD WELD DETAIL

NOTES:

#1, ▼ DENOTES FOR LOCATION OF SHIPPING MARK.
▶ INDICATES MOMENT CONNECTION.
SLOPE: x : 12 ► INDICATES DIRECTION OF SLOPE DOWNWARD
INDICATES VERTICAL BRACE

#2, ALL ELEVATION SHOWN INDICATE MAIN PART TOP LEVEL.

#3, U.N.O.(►) LOCATE THE WEB OF BEAM AT SOUTH OR WEST SIDE OF SHEAR TAB.

#4, (x) BELOW THE PART MARK ON FRAMING PLANS INDICATES THE NUMBER OF HEADED STUD PER BENT PLATE TO BE FIELD WELD.

NOTES:

ALL COMMENTS NOTED ON COVER SHEET & E8A thru E8G AND SHEET 872

VERIFY CONNECTION DEPTHS AS PREVIOUSLY NOTED

FOR APPROVAL

A	FOR APPROVAL	07/08/16

ATLAS IRON WORKS
ST. LOUIS, MO.

Project: WEBSTER UNIVERSITY INTERDISCIPLINARY SCIENCE BUILDING
Customer: PARIC CORPORATION
Owner: WEBSTER UNIVERSITY
Location: WEBSTER GUOVES,MO 63119
Dwn: TLI Date: 06/27/2016 Ckd: LJ Date: 07/08/2016
Job No. A16013 BAT: DWG#: E8A

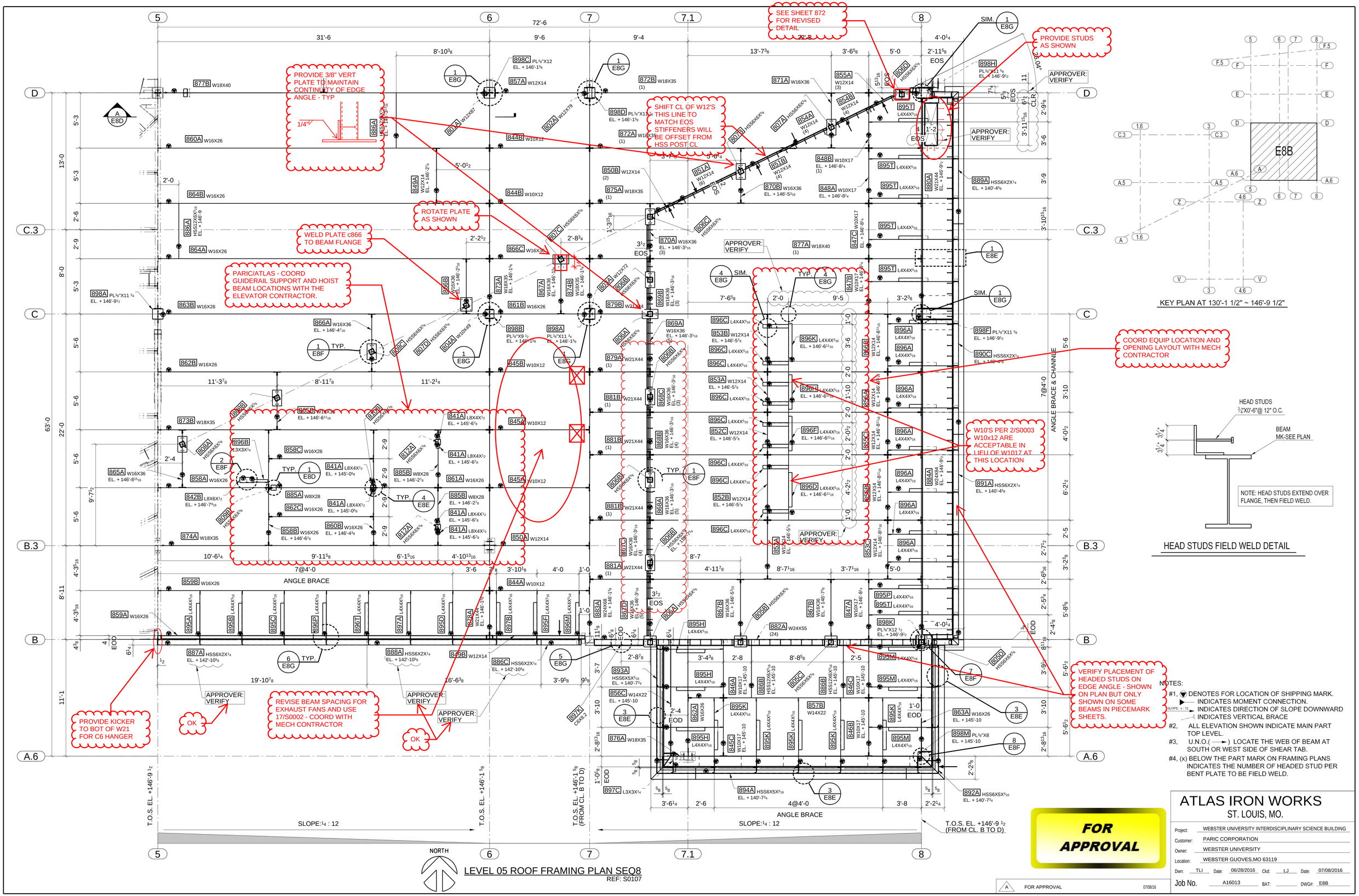

LEVEL 05 ROOF FRAMING PLAN SEQ8
REF: S0107

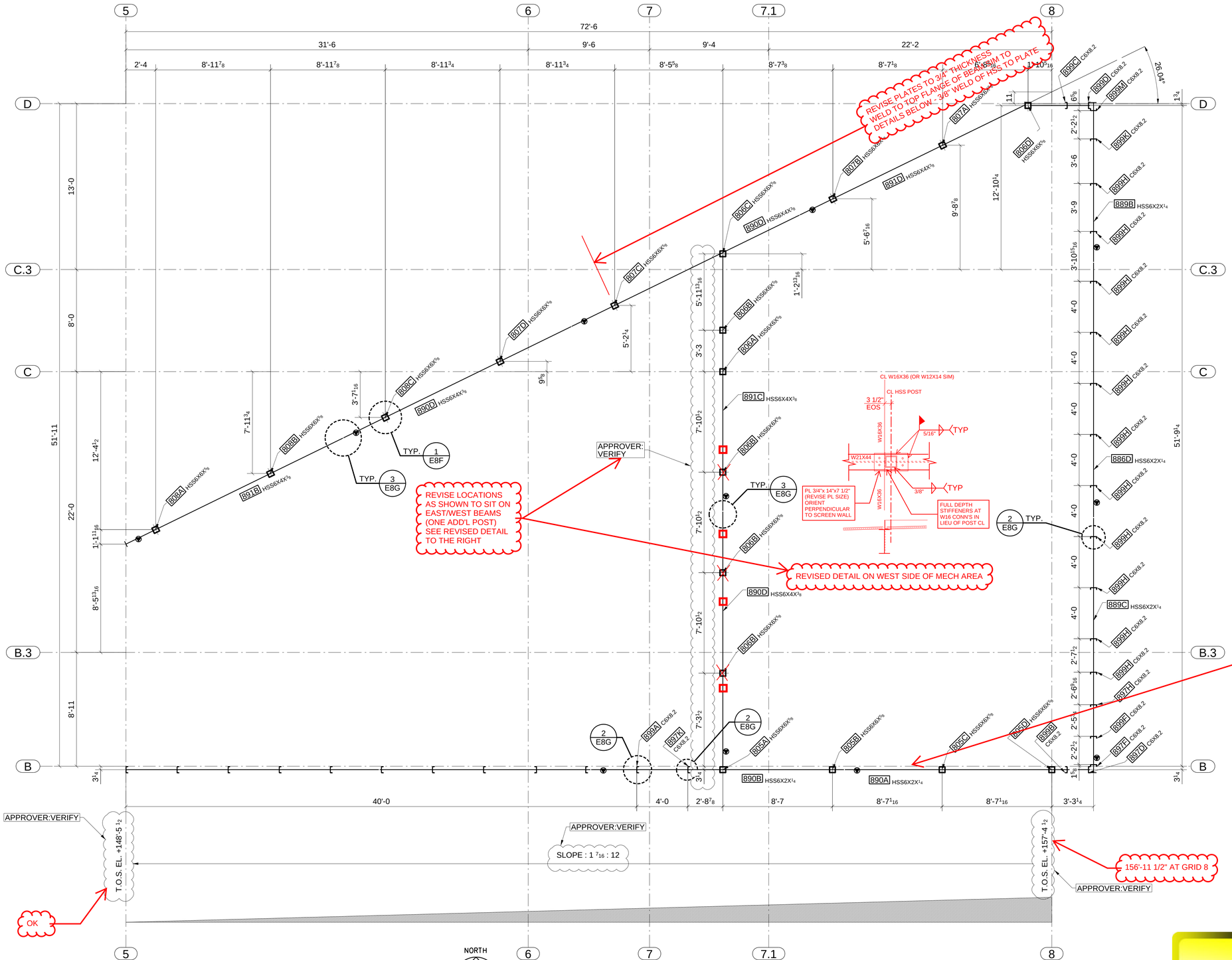

LEVEL 05 ROOF FRAMING PLAN SEQ8
REF: S0107

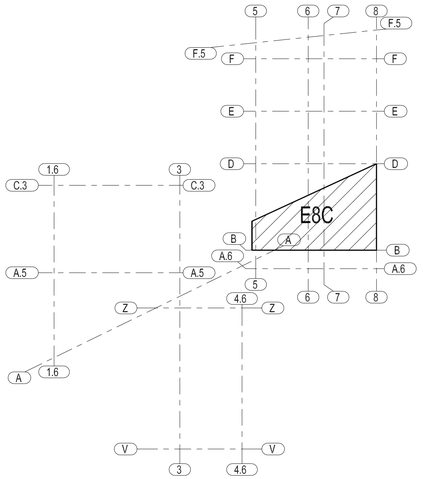

KEY PLAN AT 146'-9 1/2" ~ 157'-4 1/2"

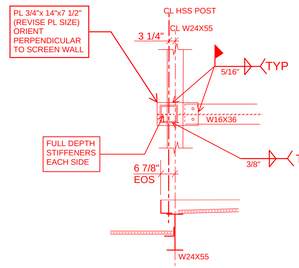

NOTES:

#1, ▼ DENOTES FOR LOCATION OF SHIPPING MARK.
▶ INDICATES MOMENT CONNECTION.
SLOPE: x : 12 INDICATES DIRECTION OF SLOPE DOWNWARD
INDICATES VERTICAL BRACE

#2, ALL ELEVATION SHOWN INDICATE MAIN PART TOP LEVEL.

#3, U.N.O.(——►) LOCATE THE WEB OF BEAM AT SOUTH OR WEST SIDE OF SHEAR TAB.

#4, (x) BELOW THE PART MARK ON FRAMING PLANS INDICATES THE NUMBER OF HEADED STUD PER BENT PLATE TO BE FIELD WELD.

FOR APPROVAL

A	FOR APPROVAL 07/08/16

ATLAS IRON WORKS
ST. LOUIS, MO.

Project:	WEBSTER UNIVERSITY INTERDISCIPLINARY SCIENCE BUILDING				
Customer:	PARIC CORPORATION				
Owner:	WEBSTER UNIVERSITY				
Location:	WEBSTER GUOVES,MO 63119				
Dwn: TLI	Date: 06/28/2016	Ckd: LJ	Date: 07/08/2016		
Job No. A16013	BAT:	DWG#: E8C			

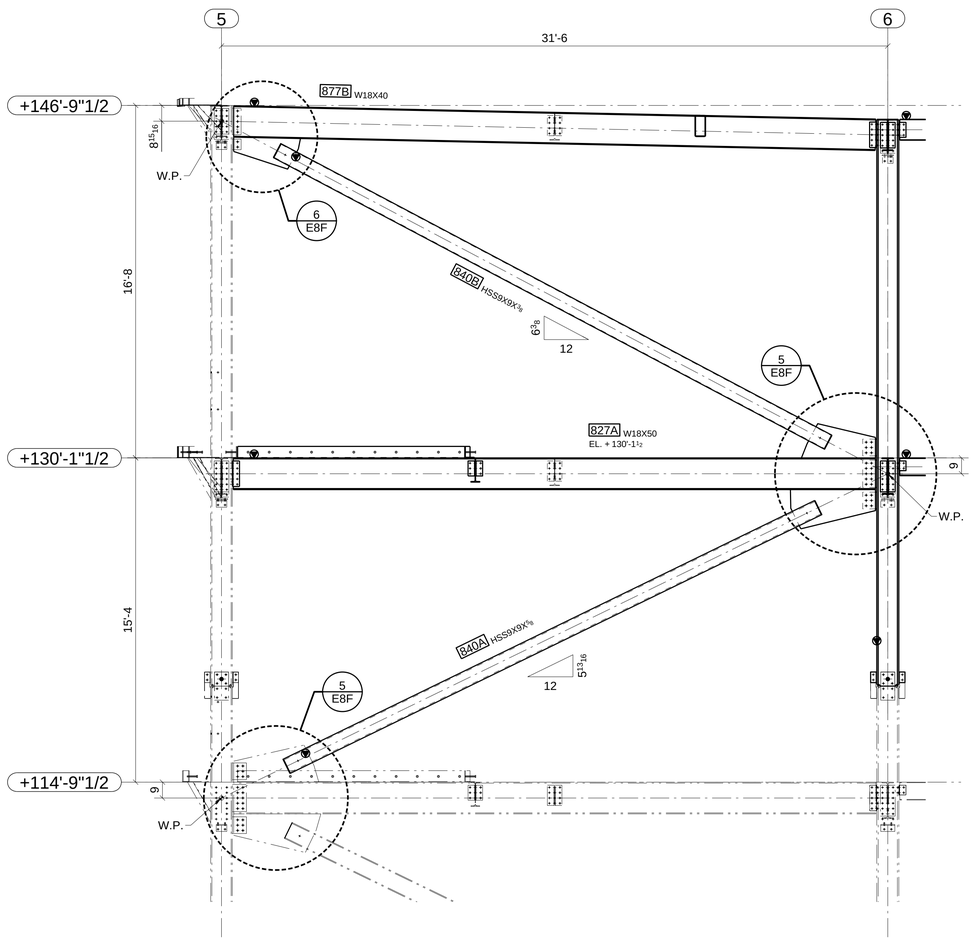

A
E8B
SECTION
ELEVATION ON LINE D

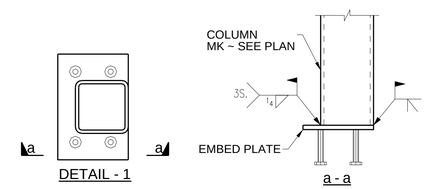

DETAIL - 1

a - a

FOR APPROVAL

A	FOR APPROVAL	07/08/16

ATLAS IRON WORKS
ST. LOUIS, MO.

Project: WEBSTER UNIVERSITY INTERDISCIPLINARY SCIENCE BUILDING
Customer: PARIC CORPORATION
Owner: WEBSTER UNIVERSITY
Location: WEBSTER GUOVES,MO 63119
Dwn: TLI Date: 06/29/2016 Ckd: LJ Date: 07/08/2016
Job No. A16013 BAT: DWG#: E8D

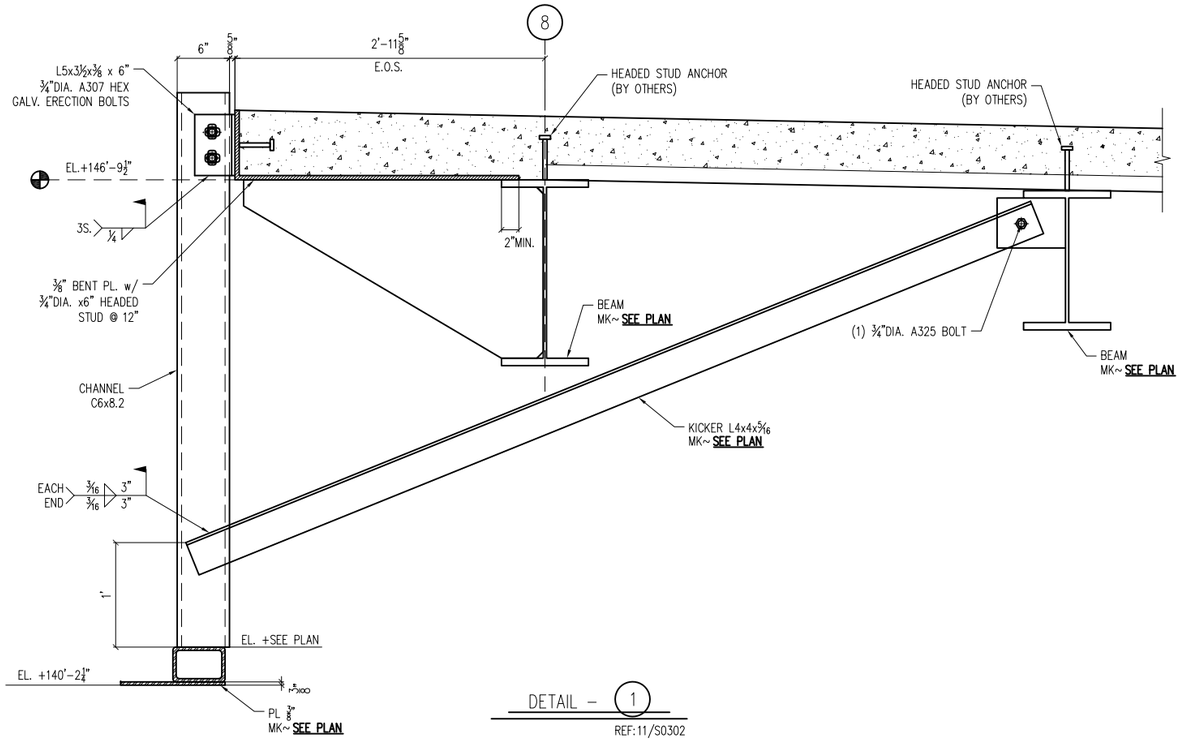

DETAIL – 1

REF:11/S0302

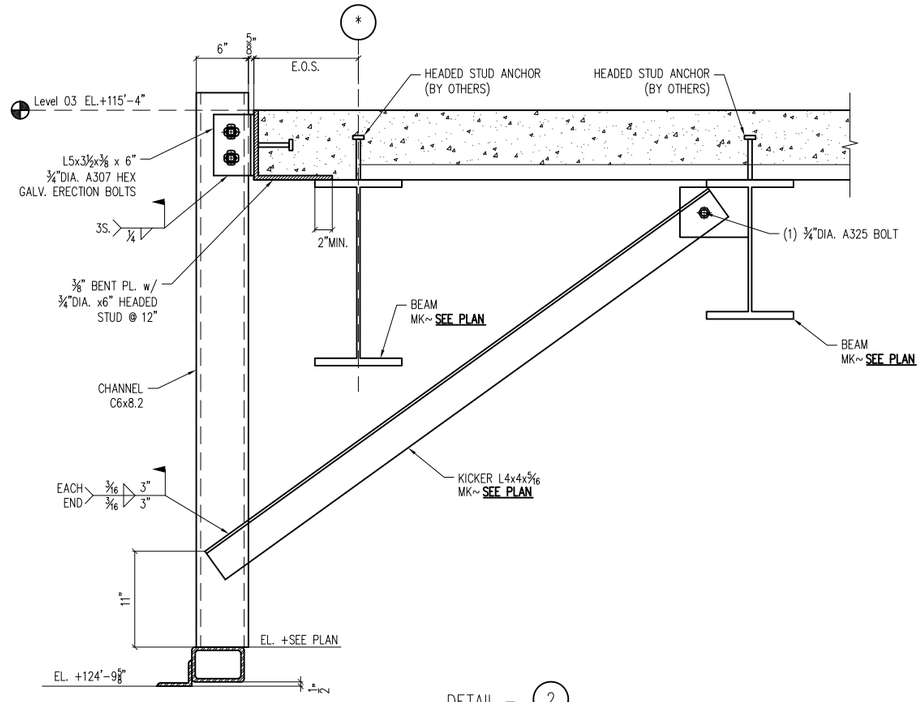

DETAIL – 2

REF:1/S0302

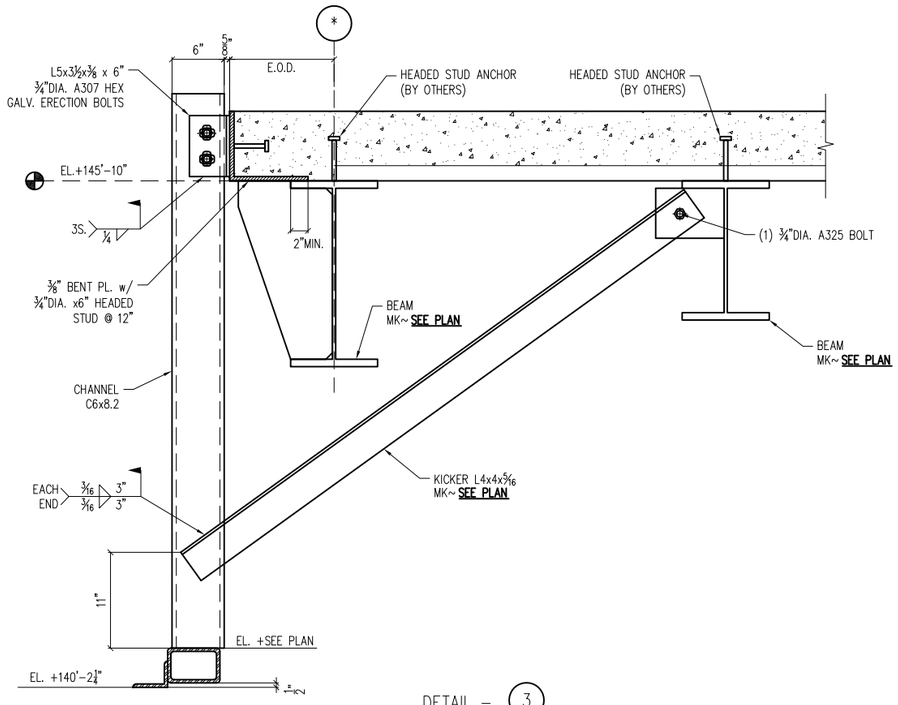

DETAIL – 3

REF:10/S0302

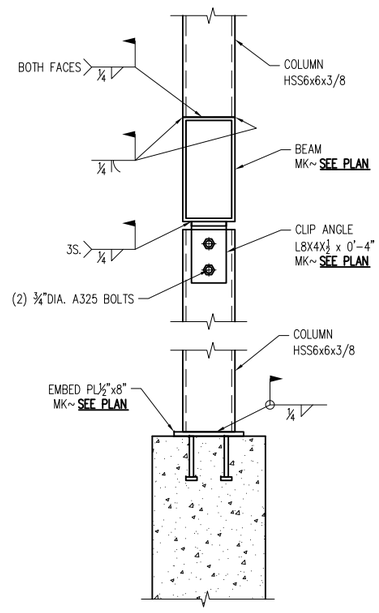

DETAIL – 4

REF:12/S0304

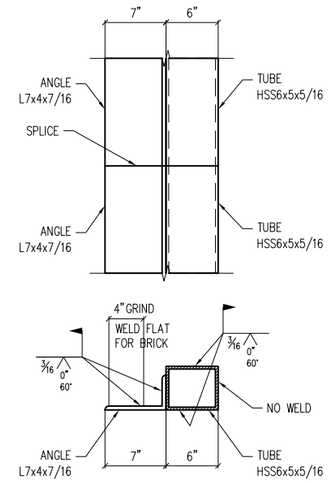

DETAIL – 5

FOR APPROVAL

A	FOR APPROVAL	07-08-16

ATLAS IRON WORKS
ST. LOUIS, MO.

Project: WEBSTER UNIVERSITY INTERDISCIPLINARY SCIENCE BUILDING
Customer: PARIC CORPORATION
Owner: WEBSTER UNIVERSITY
Location: WEBSTER GUOVES,MO 63119
Dwn: ZZ **Date:** 07/08/16 **Ckd:** LJ **Date:** 07/08/16
Job No. A16013 **BAT:** **DWG#:** E8E

SEE REVISED DETAILS ON SHEET E8C

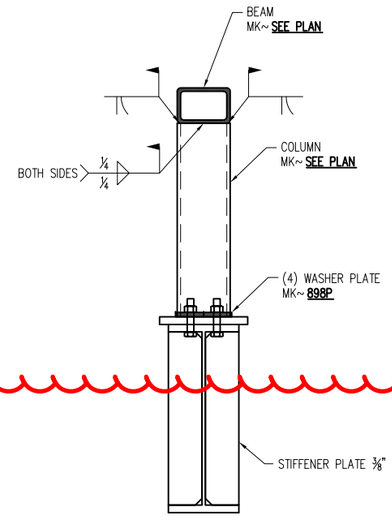

DETAIL – 1

REF: 9/S0304

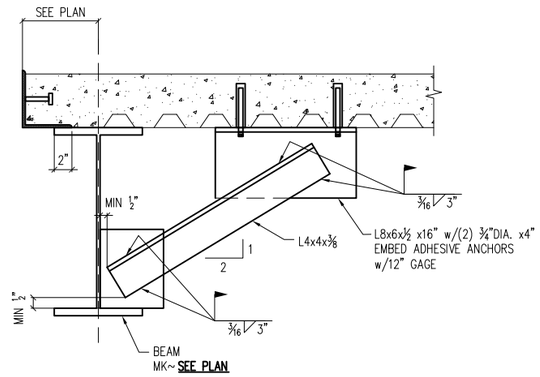

DETAIL – 2

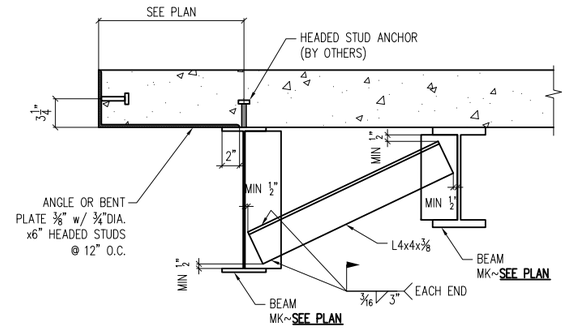

DETAIL – 3

REF: 9/S0003

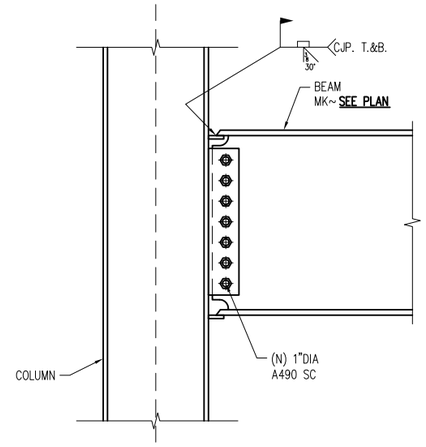

DETAIL – 4

SCHEDULE 2			
LOCATION		WELD LENGTH	
		L1	L2
GRID D/5–6	EL. +114'–9"1/2	14"	14"
	EL. +130'–1"1/2	10"	14"

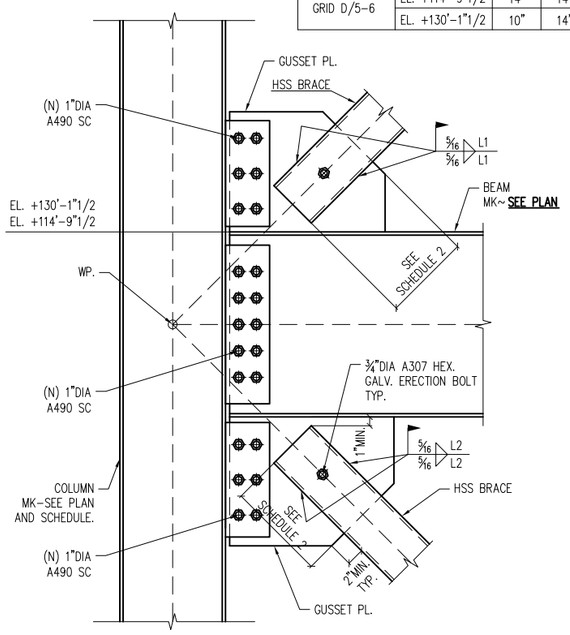

DETAIL – 5

REF: 4/S0304

SCHEDULE 1	
LOCATION	WELD LENGTH
GRID D/5–6	10"

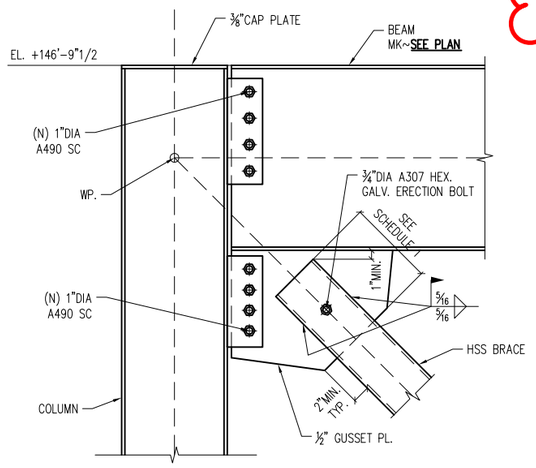

DETAIL – 6

REF: 1/S0304

WELD EACH SIDE
TO COL CAP PLATE

PROVIDE STIFFENER
ON SOUTH SIDE OF
COLUMN ABOVE W16

USE 3/4" CAP
PLATE

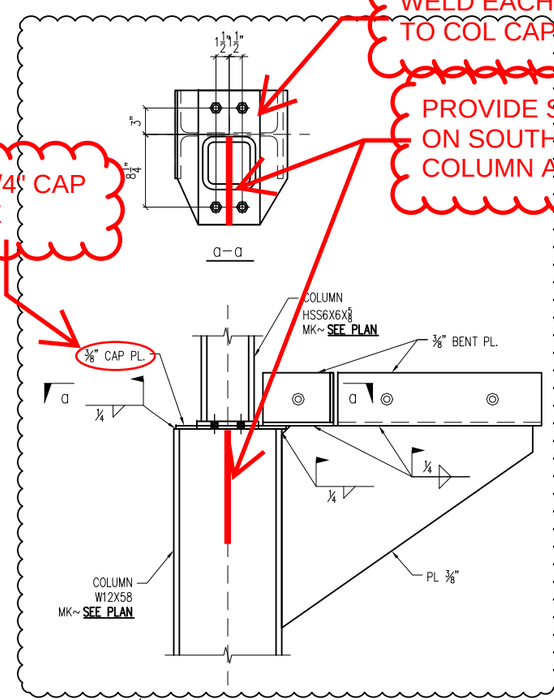

APPROVER:
VERIFY

DETAIL – 7

PM 805D

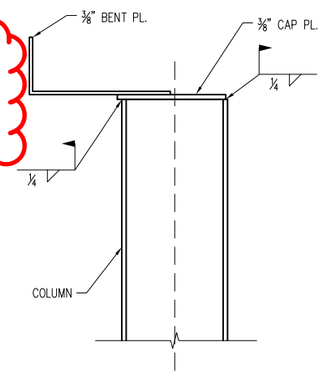

DETAIL – 8

FOR APPROVAL

ATLAS IRON WORKS
ST. LOUIS, MO.

Project: WEBSTER UNIVERSITY INTERDISCIPLINARY SCIENCE BUILDING
Customer: PARIC CORPORATION
Owner: WEBSTER UNIVERSITY
Location: WEBSTER GUOVES,MO 63119
Dwn: ZZ Date: 07/08/16 Ckd: LJ Date: 07/08/16
Job No. A16013 BAT: DWG#: E8F

A FOR APPROVAL 07–08–16

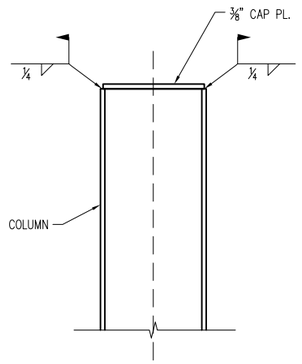

DETAIL – 1

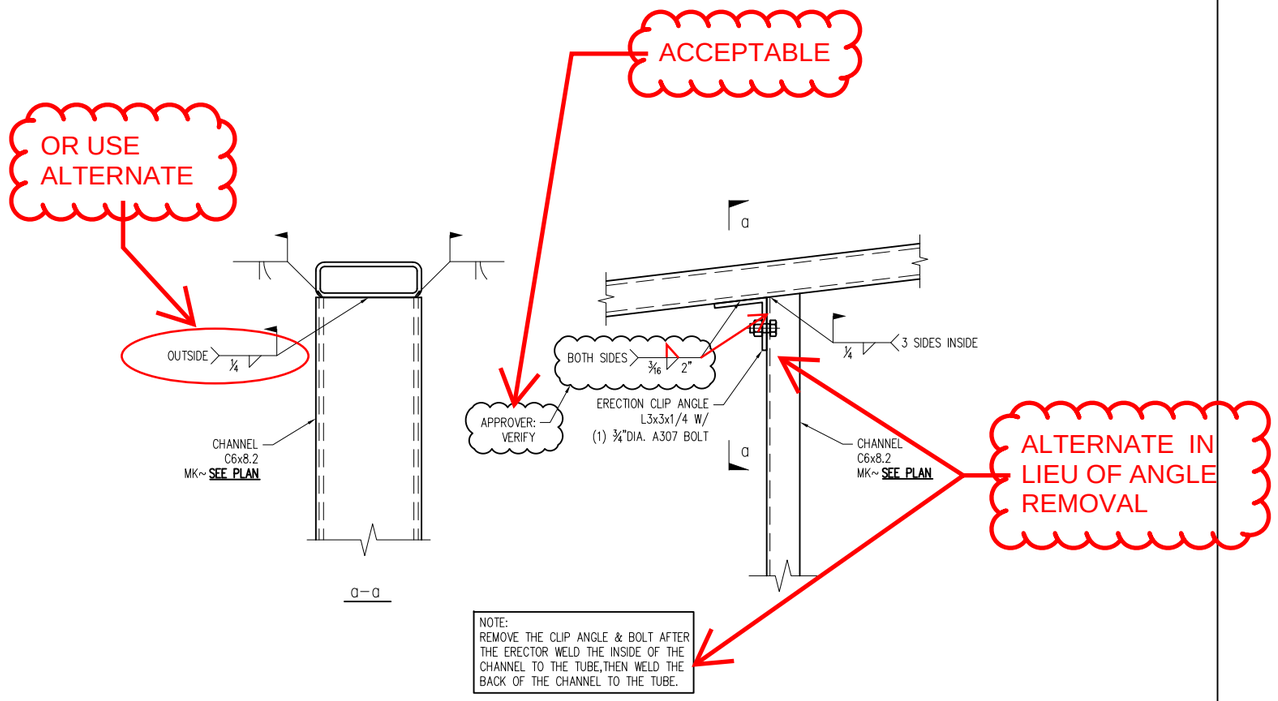

DETAIL – 2

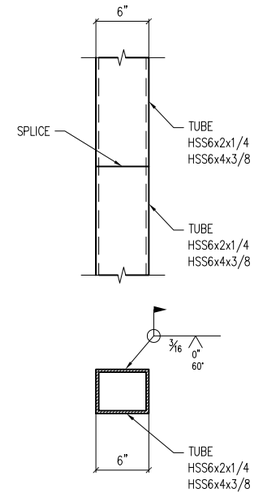

DETAIL – 3

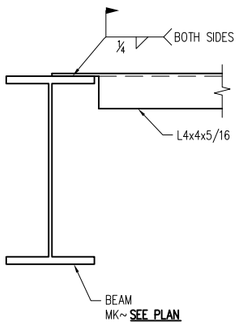

DETAIL – 4

REF:17/S0002

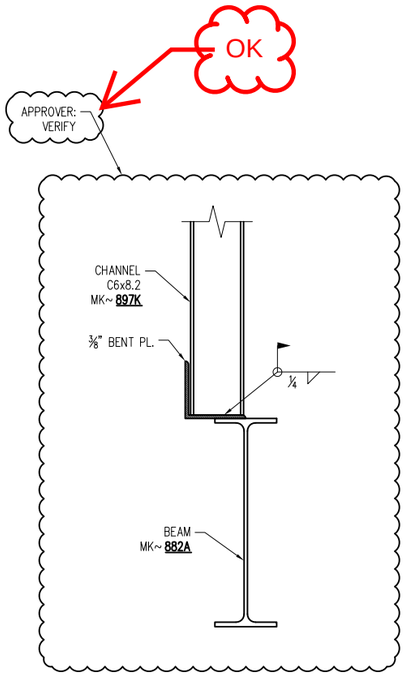

DETAIL – 5

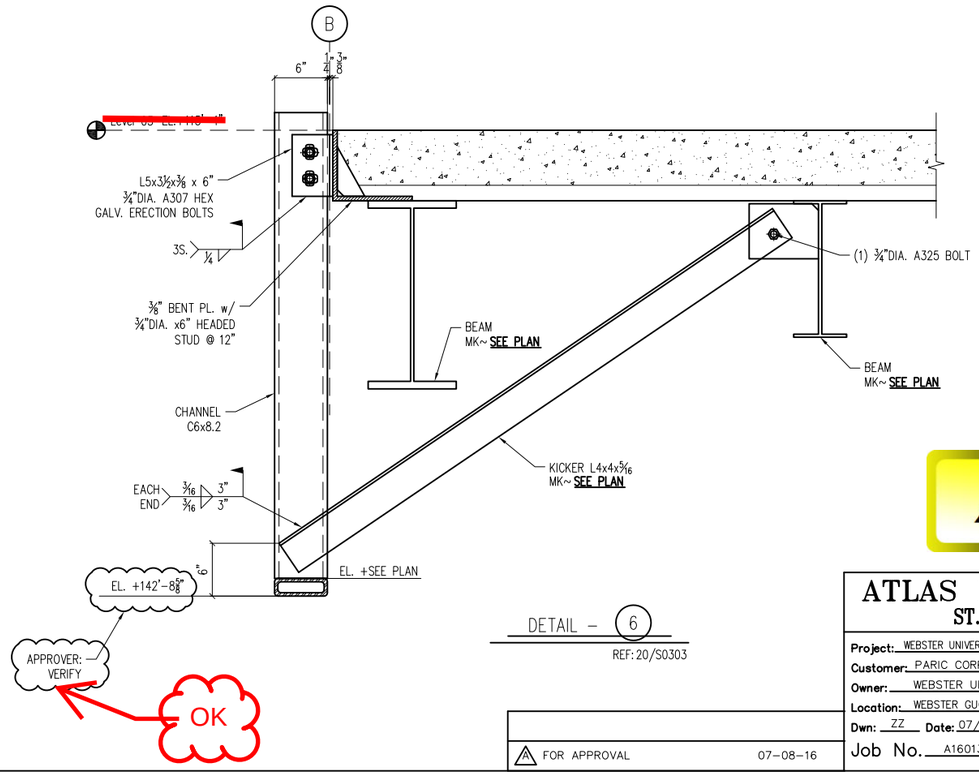

DETAIL – 6

REF:20/S0303

FOR APPROVAL

1	FOR APPROVAL	07–08–16

ATLAS IRON WORKS
ST. LOUIS, MO.

Project: WEBSTER UNIVERSITY INTERDISCIPLINARY SCIENCE BUILDING
Customer: PARIC CORPORATION
Owner: WEBSTER UNIVERSITY
Location: WEBSTER GUOVES,MO 63119
Dwn: ZZ Date: 07/08/16 Ckd: LJ Date: 07/08/16
Job No. A16013 BAT: DWG#: E8G

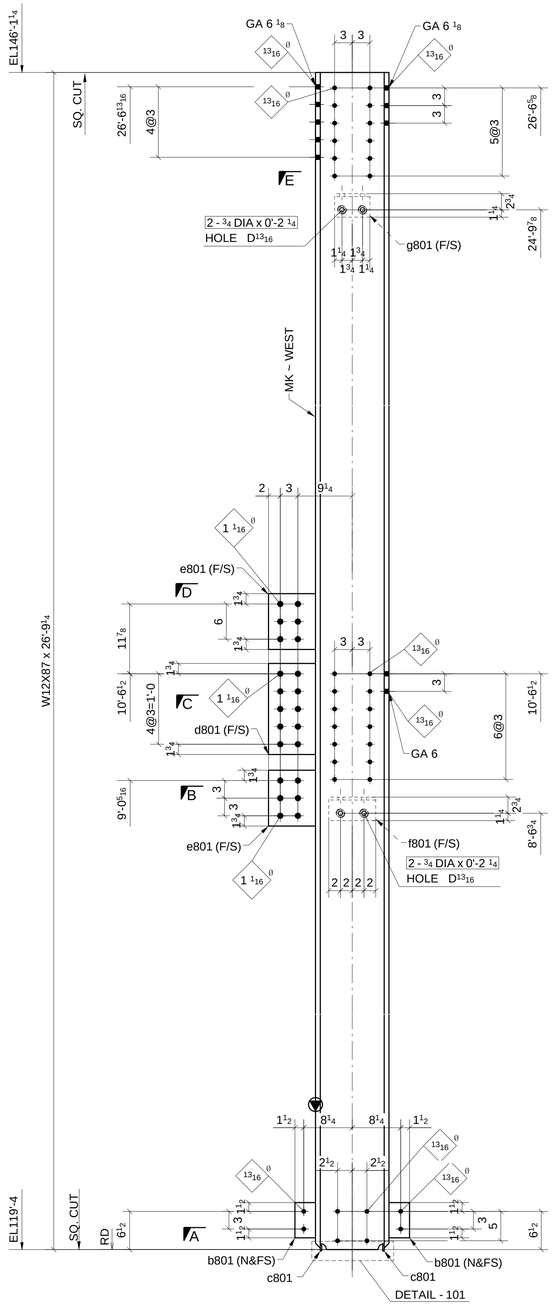

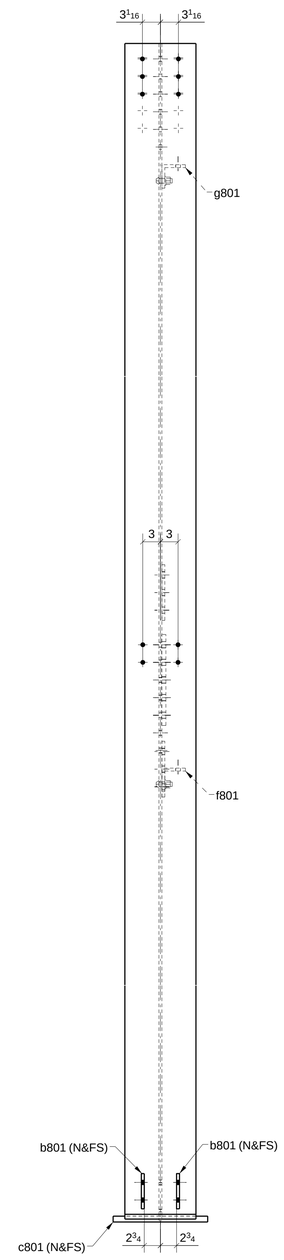

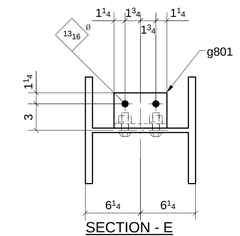

SECTION - E

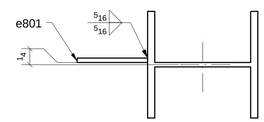

SECTION - D

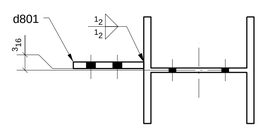

SECTION - C

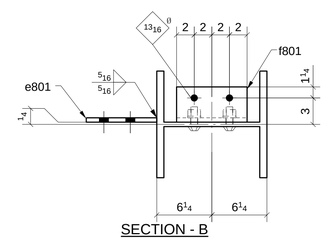

SECTION - B

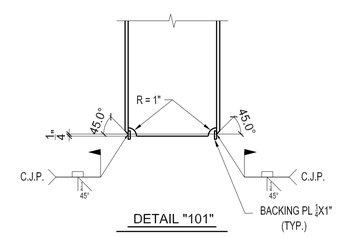

DETAIL "101"

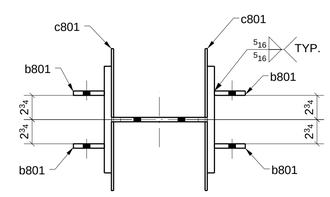

SECTION - A

ONE - COLUMN ~ 801A

LOCATION: ONE @ 6/D (REF: E8A,E8B)

SHOP BOLT IN SLOTTED HOLE
NEED "HAND TIGHTEN"

FOR APPROVAL

MATERIAL LIST

QTY	MARK	DESCRIPTION	LENGTH	MATERIAL	NOTES
1	801A	W12X87	26'-9 1/4"	A992	
4	b801	PL1/2"X3 1/2"	0'-6"	A36	
2	c801	PL1/4"X1"	1'-4 1/8"	A36	
1	d801	PL3/4"X8"	1'-3 1/2"	A572-GR.50	
2	e801	PL1/2"X8"	0'-9 1/2"	A572-GR.50	
1	f801	L4X4X1/2	0'-8"	A36	
1	g801	L4X4X1/2	0'-6"	A36	
4		3/4" DIA. W/N&W	0'-2 1/4"	A325N_TC	

A	FOR APPROVAL		07/08/16
Sequence:	8	Ref. E-Plans:	–
Material:	A992 U.N.O.	Edge Dist.:	1 1/2" U.N.O.
Holes:	13/16"DIA.	Bolts:	NOTED
Cleaning:	NONE		
Paint:	NO		
DFT:		COLOR:	

Romac By: Checked By:

Beamline By: Checked By:

ATLAS IRON WORKS
ST. LOUIS, MO.

Project:	WEBSTER UNIVERSITY INTERDISCIPLINARY SCIENCE BUILDING		
Customer:	PARIC CORPORATION		
Owner:	WEBSTER UNIVERSITY		
Location:	WEBSTER GUOVES,MO 63119		
Dwn: CL	Date: 06/24/2016	Ckd: LJ	Date: 07/08/2016
Job No.	A16013	BAT:	DWG#: 801

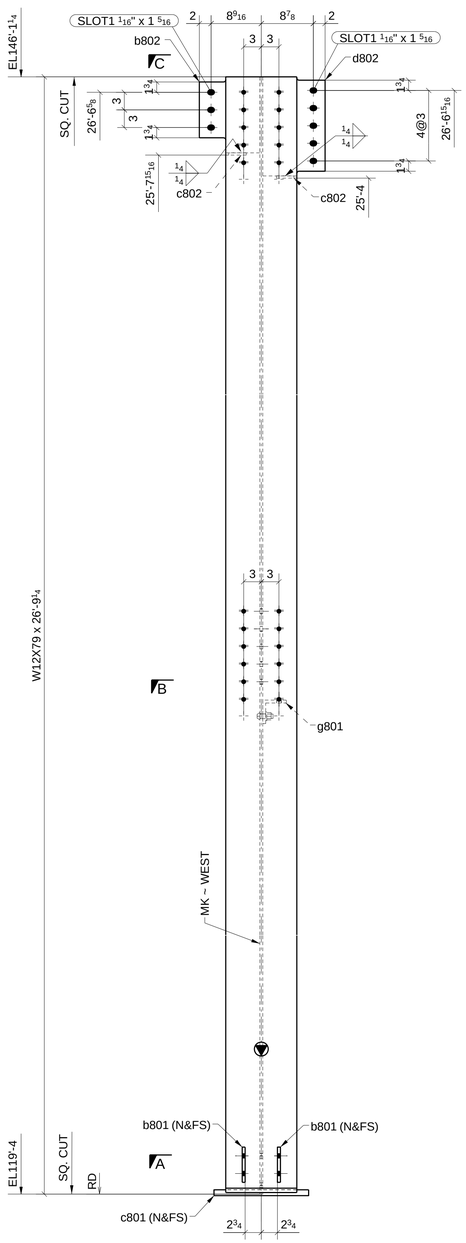

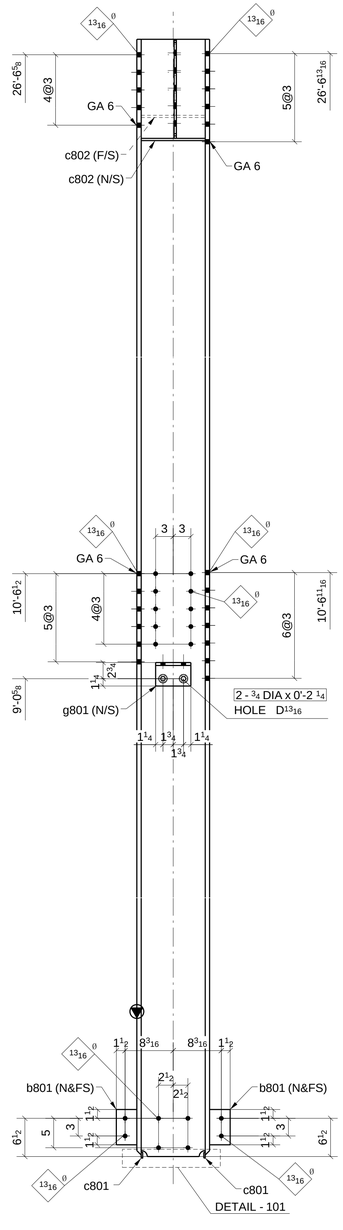

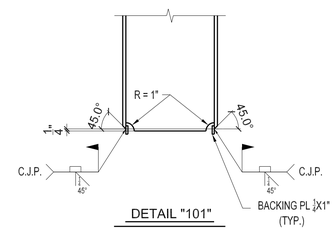

DETAIL "101"

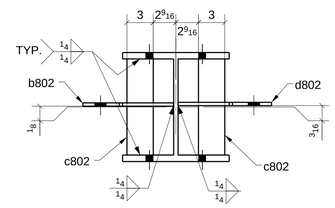

SECTION - C

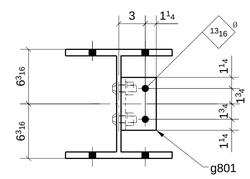

SECTION - B

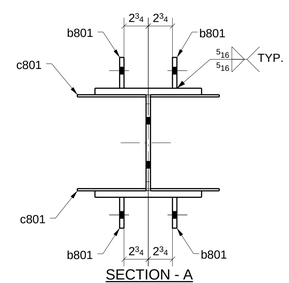

SECTION - A

ONE - COLUMN ~ 802A

LOCATION: (REF: E8A,E8B)

ONE @ 7/D

SHOP BOLT IN SLOTTED HOLE
NEED "HAND TIGHTEN"

MATERIAL LIST

QTY	MARK	DESCRIPTION	LENGTH	MATERIAL	NOTES
1	802A	W12X79	26'-9 1/4"	A992	
4	b801	PL1/2"X3 1/2"	0'-6"	A36	
1	b802	PL3/8"X10 5/16"	1'-0 15/16"	A36	
2	c801	PL1/4"X1"	1'-4 1/8"	A36	
2	c802	PL3/8"X3"	0'-10 7/8"	A36	
1	d802	PL3/8"X10 5/8"	1'-4 7/8"	A36	
1	g801	L4X4X1/2	0'-6"	A36	
2		3/4" DIA. W/N&W	0'-2 1/4"	A325N_TC	

A	FOR APPROVAL		07/08/16
Sequence:	8	Ref. E-Plans:	–
Material:	A992 U.N.O.	Edge Dist.:	1 1/2" U.N.O.
Holes:	13/16"DIA.	Bolts:	NOTED
Cleaning:	NONE		
Paint:	NO		
DFT:		COLOR:	

Romac By: Checked By:

Beamline By: Checked By:

ATLAS IRON WORKS
ST. LOUIS, MO.

Project:	WEBSTER UNIVERSITY INTERDISCIPLINARY SCIENCE BUILDING				
Customer:	PARIC CORPORATION				
Owner:	WEBSTER UNIVERSITY				
Location:	WEBSTER GUOVES,MO 63119				
Dwn: CL	Date: 06/24/2016	Ckd: LJ	Date: 07/08/2016		
Job No. A16013	BAT:	DWG#: 802			

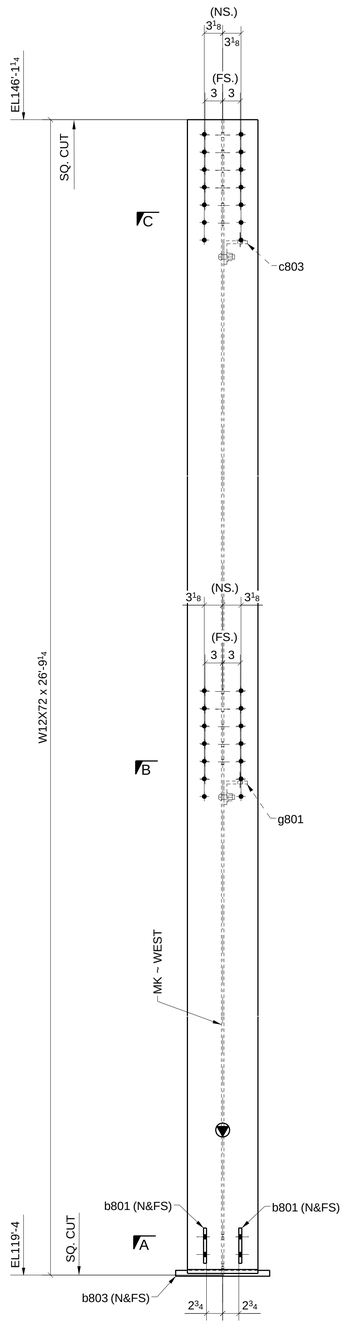

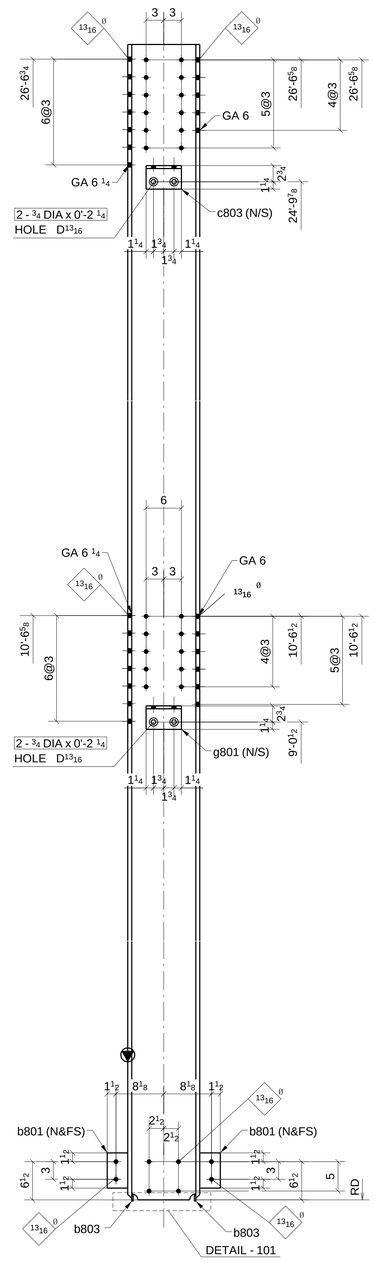

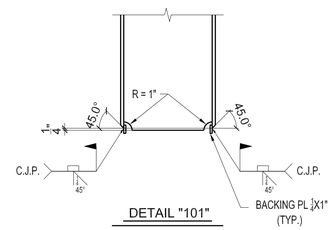

DETAIL "101"

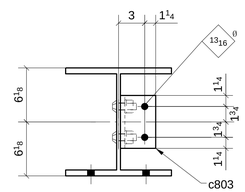

SECTION - C

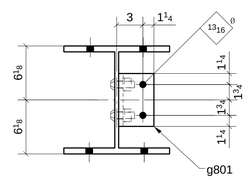

SECTION - B

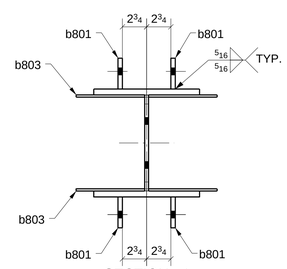

SECTION - A

ONE - COLUMN ~ 803A

LOCATION: ONE @ 7/C

(REF: E8A,E8B)

SHOP BOLT IN SLOTTED HOLE
NEED "HAND TIGHTEN"

MATERIAL LIST

QTY	MARK	DESCRIPTION	LENGTH	MATERIAL	NOTES
1	803A	W12X72	26'-9 1/4"	A992	
4	b801	PL1/2"X3 1/2"	0'-6"	A36	
2	b803	PL1/4"X1"	1'-4"	A36	
1	c803	L4X4X1/2	0'-6"	A36	
1	g801	L4X4X1/2	0'-6"	A36	
4		3/4" DIA. W/N&W	0'-2 1/4"	A325N TC	

A	FOR APPROVAL		07/08/16
Sequence:	8	Ref. E-Plans:	–
Material:	A992 U.N.O.	Edge Dist.:	1 1/2" U.N.O.
Holes:	13/16"DIA.	Bolts:	NOTED
Cleaning:	NONE		
Paint:	NO		
DFT:		COLOR:	

Romac By: Checked By:

Beamline By: Checked By:

ATLAS IRON WORKS
ST. LOUIS, MO.

Project: WEBSTER UNIVERSITY INTERDISCIPLINARY SCIENCE BUILDING

Customer: PARIC CORPORATION

Owner: WEBSTER UNIVERSITY

Location: WEBSTER GUOVES,MO 63119

Dwn: CL Date: 06/24/2016 Ckd: LJ Date: 07/08/2016

Job No. A16013 BAT: DWG#: 803

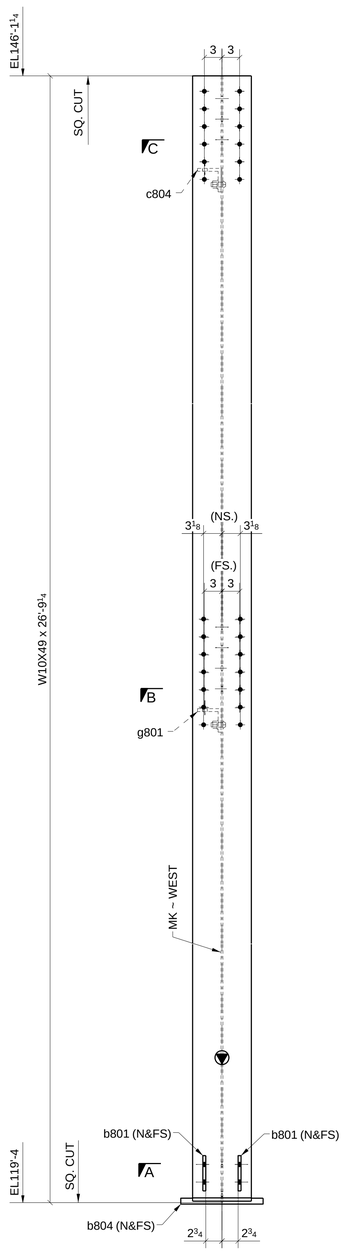

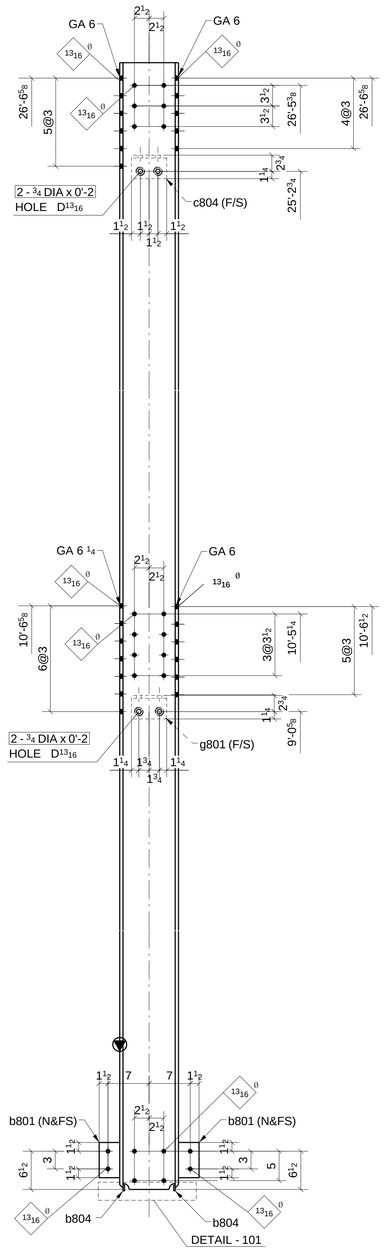

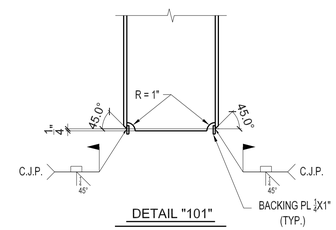

DETAIL "101"

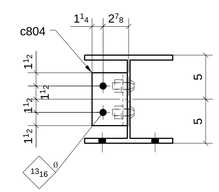

SECTION - C

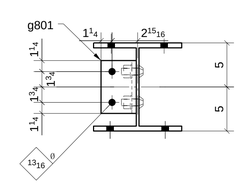

SECTION - B

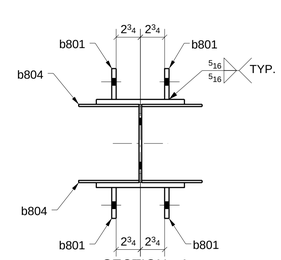

SECTION - A

ONE - COLUMN ~ 804A

LOCATION: (REF: E8A,E8B)
ONE @ 6/C

SHOP BOLT IN SLOTTED HOLE
NEED "HAND TIGHTEN"

MATERIAL LIST

QTY	MARK	DESCRIPTION	LENGTH	MATERIAL	NOTES
1	804A	W10X49	26'-9 1/4"	A992	
4	b801	PL1/2"X3 1/2"	0'-6"	A36	
2	b804	PL1/4"X1"	1'-2"	A36	
1	c804	L4X4X1/2	0'-6"	A36	
1	g801	L4X4X1/2	0'-6"	A36	
4		3/4" DIA. W/N&W	0'-2"	A325N TC	

A	FOR APPROVAL		07/08/16
Sequence:	8	Ref. E-Plans:	--
Material:	A992 U.N.O.	Edge Dist.:	1 1/2" U.N.O.
Holes:	13/16"DIA.	Bolts:	NOTED
Cleaning:	NONE		
Paint:	NO		
DFT:		COLOR:	

Romac By: Checked By:
Beamline By: Checked By:

ATLAS IRON WORKS
ST. LOUIS, MO.

Project:	WEBSTER UNIVERSITY INTERDISCIPLINARY SCIENCE BUILDING		
Customer:	PARIC CORPORATION		
Owner:	WEBSTER UNIVERSITY		
Location:	WEBSTER GUOVES,MO 63119		
Dwn: CL	Date: 06/24/2016	Ckd: LJ	Date: 07/08/2016
Job No. A16013	BAT:	DWG#: 804	

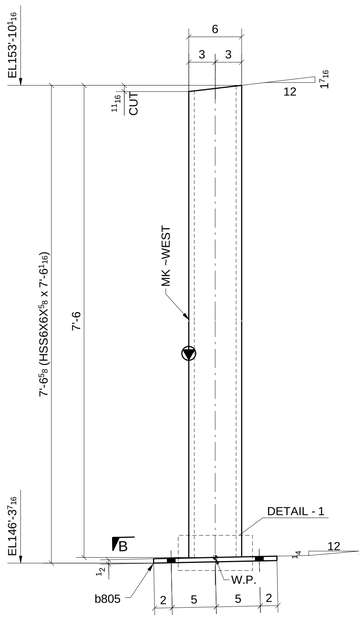

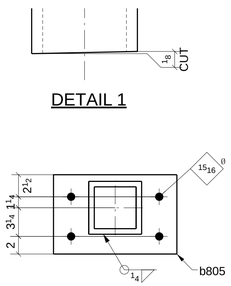

ONE - COLUMN ~ 805A

LOCATION: (REF: E8B,E8C)
ONE @ 7-7.1/B

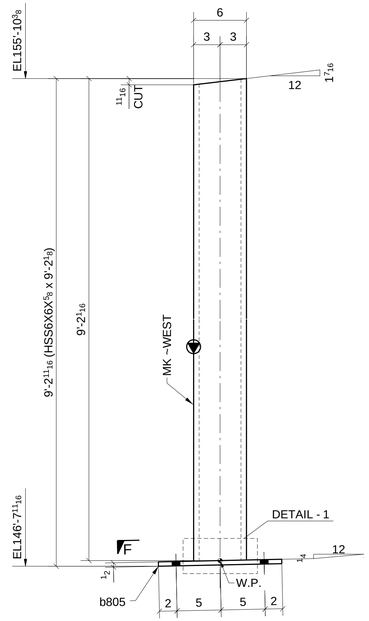

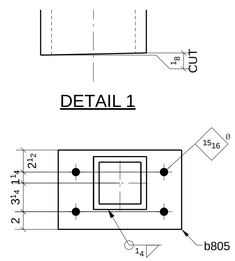

ONE - COLUMN ~ 805C

LOCATION: (REF: E8B)
ONE @ 7.1-8/B

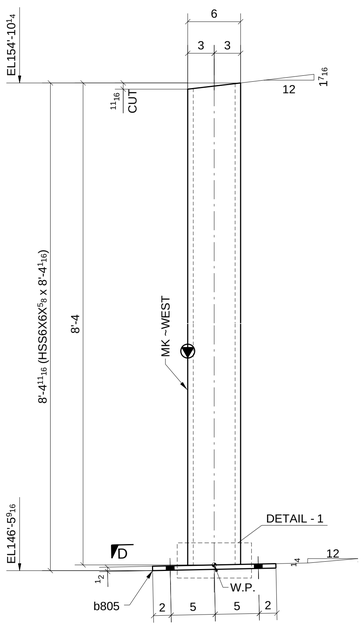

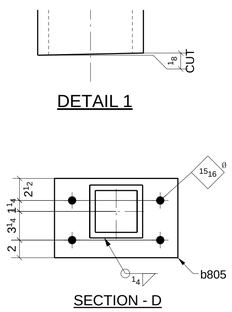

ONE - COLUMN ~ 805B

LOCATION: (REF: E8B,E8C)
ONE @ 7.1-8/B

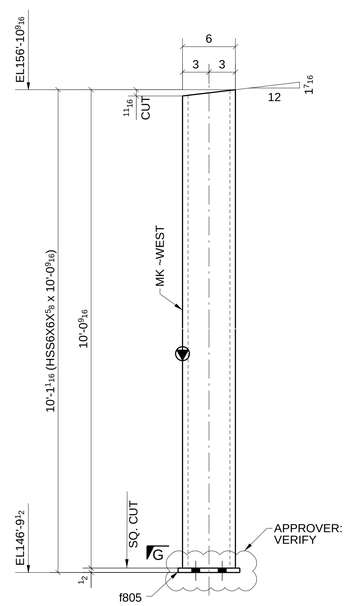

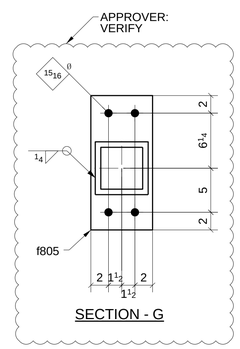

ONE - COLUMN ~ 805D

LOCATION: (REF: E8B,E8C)
ONE @ 8/B

FOR APPROVAL

MATERIAL LIST

QTY	MARK	DESCRIPTION	LENGTH	MATERIAL	NOTES
1	805A	HSS6X6X5/8	7'-6 1/16"	A500-GR.B-46	
1	b805	PL1/2"X9"	1'-2"	A36	
1	805B	HSS6X6X5/8	8'-4 1/16"	A500-GR.B-46	
1	b805	PL1/2"X9"	1'-2"	A36	
1	805C	HSS6X6X5/8	9'-2 1/8"	A500-GR.B-46	
1	b805	PL1/2"X9"	1'-2"	A36	
1	805D	HSS6X6X5/8	10'-0 9/16"	A500-GR.B-46	
1	f805	PL1/2"X7"	1'-3 1/4"	A36	

A	FOR APPROVAL		07/08/16
Sequence:	8	Ref. E-Plans:	--
Material:	A992 U.N.O.	Edge Dist.:	1 1/2" U.N.O.
Holes:	13/16"DIA.	Bolts:	NOTED
Cleaning:	NONE		
Paint:	NO		
DFT:		COLOR:	

Romac By: Checked By:
Beamline By: Checked By:

ATLAS IRON WORKS
ST. LOUIS, MO.

Project: WEBSTER UNIVERSITY INTERDISCIPLINARY SCIENCE BUILDING
Customer: PARIC CORPORATION
Owner: WEBSTER UNIVERSITY
Location: WEBSTER GUOVES,MO 63119
Dwn: CL Date: 06/24/2016 Ckd: LJ Date: 07/08/2016
Job No. A16013 BAT: DWG#: 805

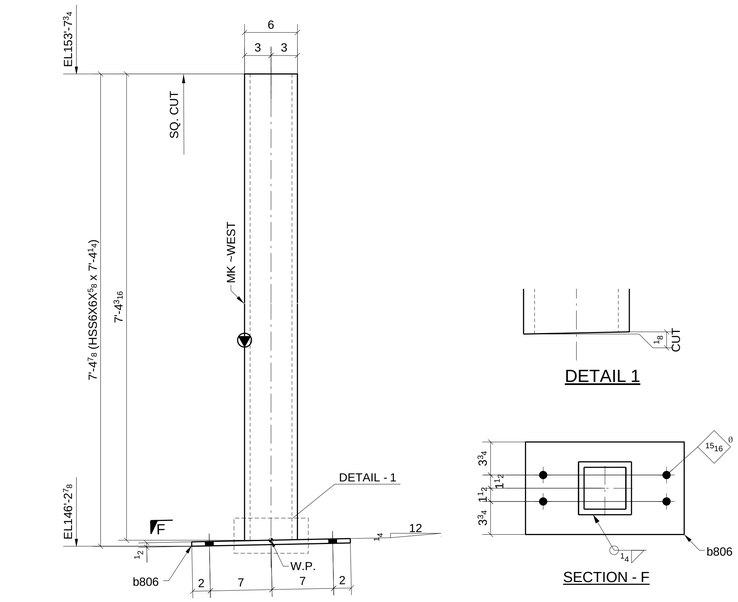

ONE - COLUMN ~ 806A

LOCATION: (REF: E8B,E8C)
ONE @ 7-7.1/C

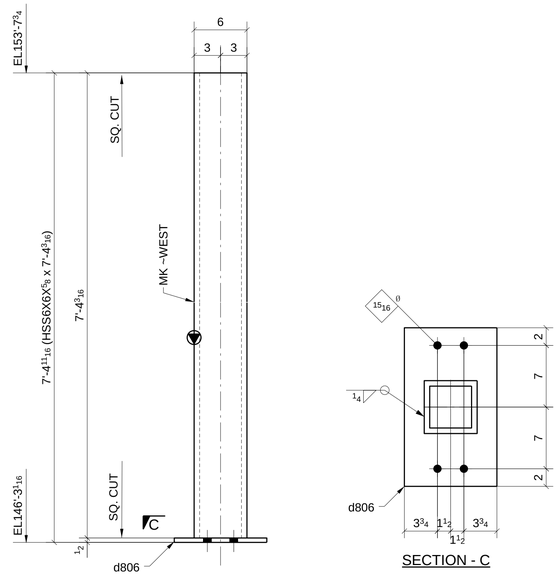

4 - COLUMNS ~ 806B

LOCATION: (REF: E8B,E8C)
ONE @ 7-7.1/B-B.3
ONE @ 7-7.1/B.3-C
ONE @ 7-7.1/B.3-C
ONE @ 7-7.1/C-C.3

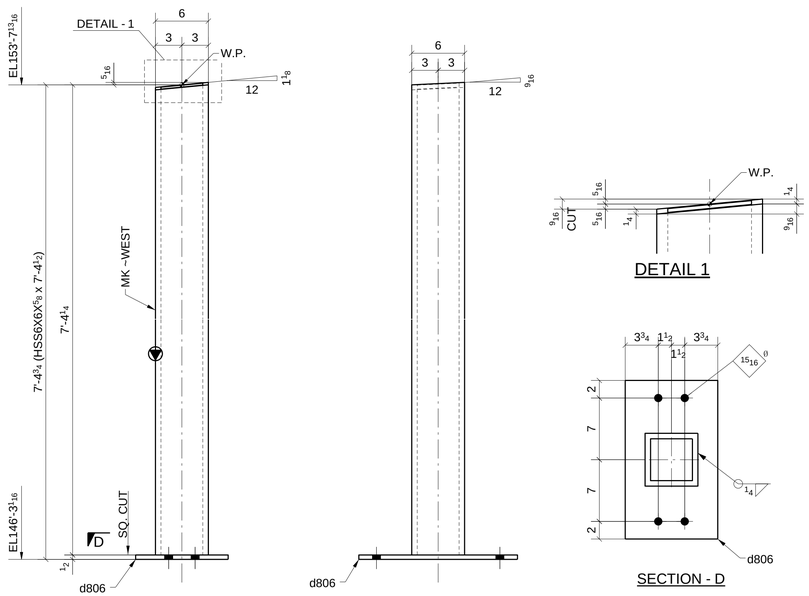

ONE - COLUMN ~ 806C

LOCATION: (REF: E8B,E8C)
ONE @ 7-7.1/C.3

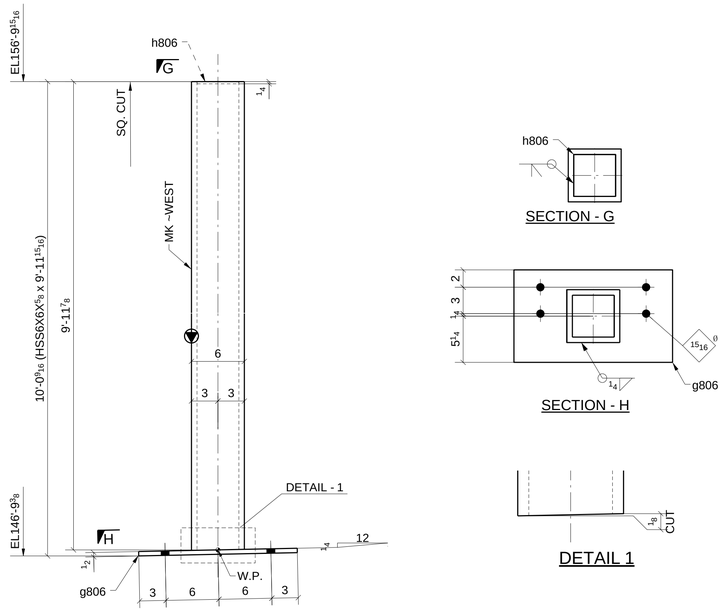

ONE - COLUMN ~ 806D

LOCATION: (REF: E8B,E8C)
ONE @ 7.1-8/D

MATERIAL LIST

QTY	MARK	DESCRIPTION	LENGTH	MATERIAL	NOTES
1	806A	HSS6X6X5/8	7'-4 1/4"	A500-GR.B-46	
1	b806	PL1/2"X10 1/2"	1'-6"	A36	
4	806B	HSS6X6X5/8	7'-4 3/16"	A500-GR.B-46	
4	d806	PL1/2"X10 1/2"	1'-6"	A36	
1	806C	HSS6X6X5/8	7'-4 1/2"	A500-GR.B-46	
1	d806	PL1/2"X10 1/2"	1'-6"	A36	
1	806D	HSS6X6X5/8	9'-11 15/16"	A500-GR.B-46	
1	g806	PL1/2"X10 1/2"	1'-6"	A36	
1	h806	PL1/4"X4 3/4"	0'-4 3/4"	A36	

Romac By: Checked By:
Beamline By: Checked By:

A FOR APPROVAL 07/08/16

Sequence: 8 Ref. E-Plans: --
Material: A992 U.N.O. Edge Dist.: 1 1/2" U.N.O.
Holes: 13/16"DIA. Bolts: NOTED
Cleaning: NONE
Paint: NO
DFT: COLOR:

ATLAS IRON WORKS
ST. LOUIS, MO.

Project: WEBSTER UNIVERSITY INTERDISCIPLINARY SCIENCE BUILDING
Customer: PARIC CORPORATION
Owner: WEBSTER UNIVERSITY
Location: WEBSTER GUOVES,MO 63119
Dwn: CL Date: 07/06/2016 Ckd: LJ Date: 07/08/2016
Job No. A16013 BAT: DWG#: 806

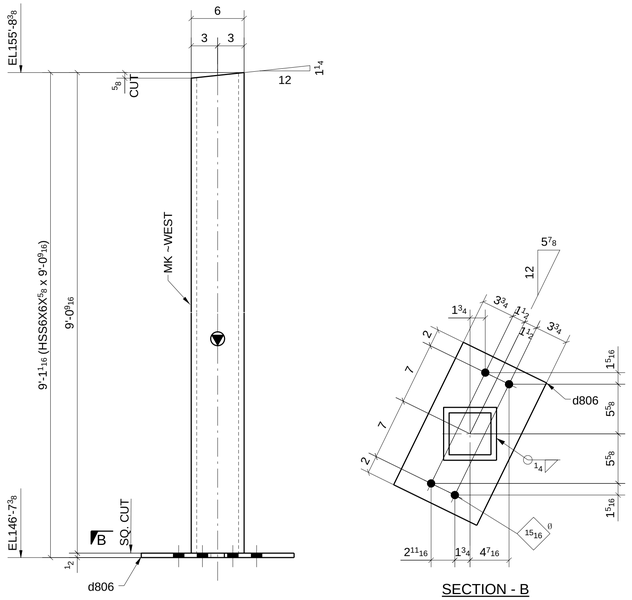

SECTION - B

ONE - COLUMN ~ 807A

LOCATION: (REF: E8B,E8C)
ONE @ 7.1-8/C.3-D

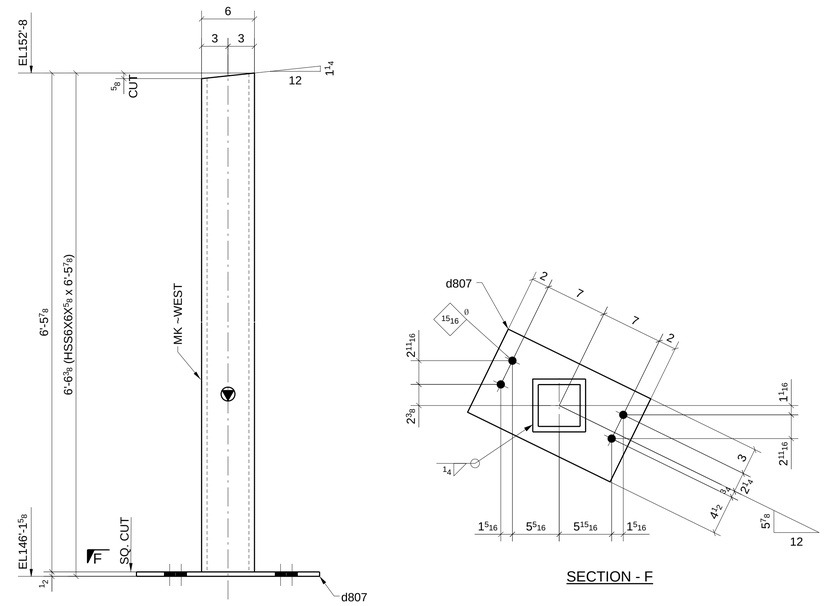

SECTION - F

ONE - COLUMN ~ 807C

LOCATION: (REF: E8B,E8C)
ONE @ 6-7/C-C.3

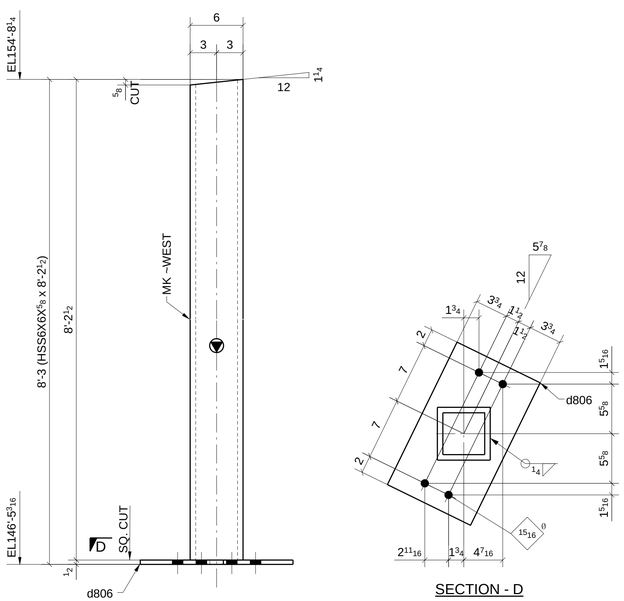

SECTION - D

ONE - COLUMN ~ 807B

LOCATION: (REF: E8B,E8C)
ONE @ 7.1-8/C.3-D

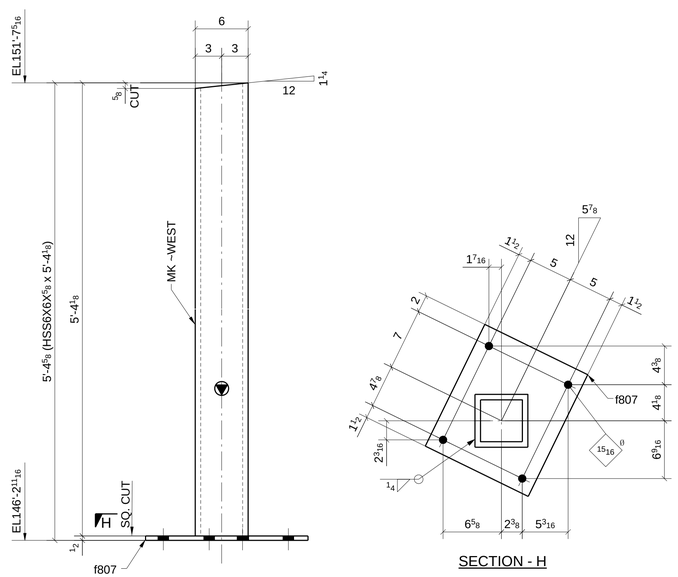

SECTION - H

ONE - COLUMN ~ 807D

LOCATION: (REF: E8B,E8C)
ONE @ 5-6/C

MATERIAL LIST

QTY	MARK	DESCRIPTION	LENGTH	MATERIAL	NOTES
1	807A	HSS6X6X5/8	9'-0 9/16"	A500-GR.B-46	
1	d806	PL1/2"X10 1/2"	1'-6"	A36	
1	807B	HSS6X6X5/8	8'-2 1/2"	A500-GR.B-46	
1	d806	PL1/2"X10 1/2"	1'-6"	A36	
1	807C	HSS6X6X5/8	6'-5 7/8"	A500-GR.B-46	
1	d807	PL1/2"X10 1/2"	1'-6"	A36	
1	807D	HSS6X6X5/8	5'-4 1/8"	A500-GR.B-46	
1	f807	PL1/2"X13"	1'-3 3/8"	A36	

Romac By: Checked By:
Beamline By: Checked By:

A	FOR APPROVAL	07/08/16

Sequence: 8 Ref. E-Plans: –
Material: A992 U.N.O. Edge Dist.: 1 1/2" U.N.O.
Holes: 13/16"DIA. Bolts: NOTED
Cleaning: NONE
Paint: NO
DFT: COLOR:

ATLAS IRON WORKS
ST. LOUIS, MO.

Project: WEBSTER UNIVERSITY INTERDISCIPLINARY SCIENCE BUILDING
Customer: PARIC CORPORATION
Owner: WEBSTER UNIVERSITY
Location: WEBSTER GUOVES,MO 63119
Dwn: CL Date: 07/06/2016 Ckd: LJ Date: 07/08/2016
Job No. A16013 BAT: DWG#: 807

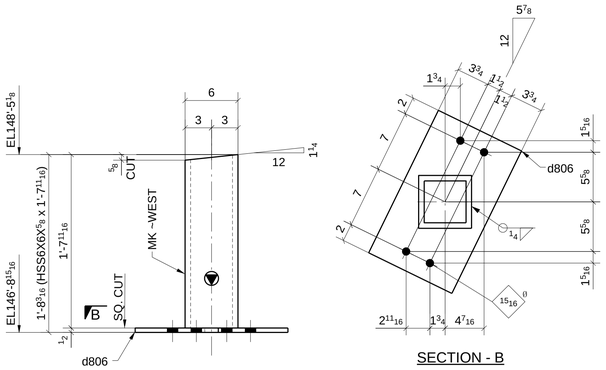

SECTION - B

ONE - COLUMN ~ 808A

LOCATION: (REF: E8B,E8C)
ONE @ 5-6/B.3-C

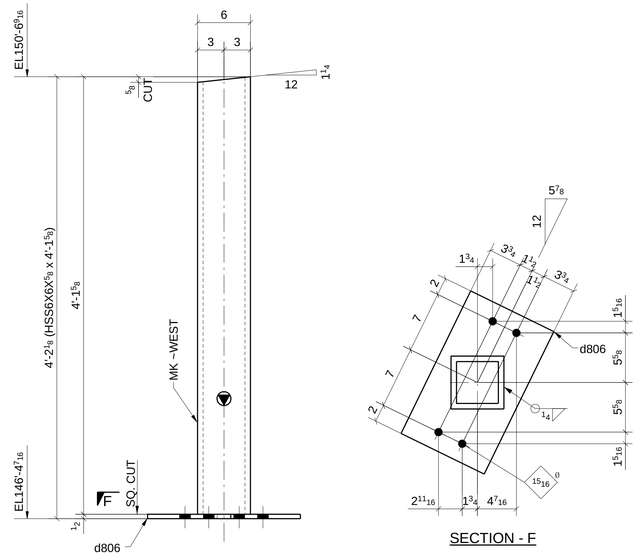

SECTION - F

ONE - COLUMN ~ 808C

LOCATION: (REF: E8B,E8C)
ONE @ 5-6/B.3-C

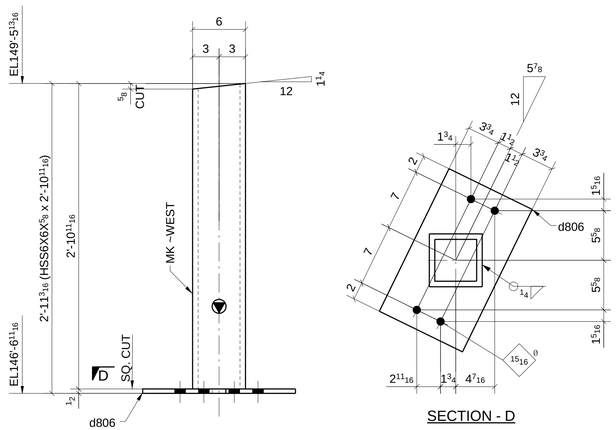

SECTION - D

ONE - COLUMN ~ 808B

LOCATION: (REF: E8B,E8C)
ONE @ 5-6/B.3-C

MATERIAL LIST

QTY	MARK	DESCRIPTION	LENGTH	MATERIAL	NOTES
1	808A	HSS6X6X5/8	1'-7 11/16"	A500-GR.B-46	
1	d806	PL1/2"X10 1/2"	1'-6"	A36	
1	808B	HSS6X6X5/8	2'-10 11/16"	A500-GR.B-46	
1	d806	PL1/2"X10 1/2"	1'-6"	A36	
1	808C	HSS6X6X5/8	4'-1 5/8"	A500-GR.B-46	
1	d806	PL1/2"X10 1/2"	1'-6"	A36	

Romac By: Checked By:
Beamline By: Checked By:

A FOR APPROVAL 07/08/16

Sequence: 8 Ref. E-Plans: –
Material: A992 U.N.O. Edge Dist.: 1 1/2" U.N.O.
Holes: 13/16"DIA. Bolts: NOTED
Cleaning: NONE
Paint: NO
DFT: COLOR:

ATLAS IRON WORKS
ST. LOUIS, MO.

Project: WEBSTER UNIVERSITY INTERDISCIPLINARY SCIENCE BUILDING
Customer: PARIC CORPORATION
Owner: WEBSTER UNIVERSITY
Location: WEBSTER GUOVES,MO 63119
Dwn: CL Date: 07/06/2016 Ckd: LJ Date: 07/08/2016
Job No. A16013 BAT: DWG#: 808

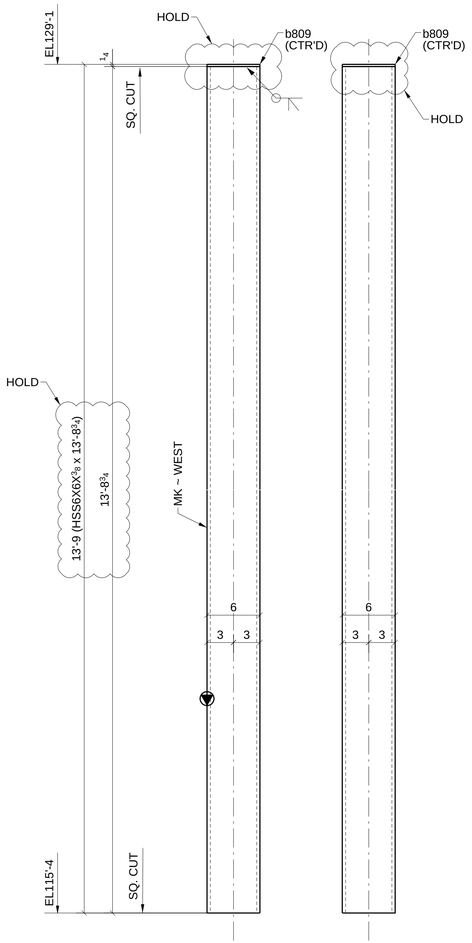

ONE - COLUMN ~ 809A

LOCATION: (REF: E8B)
ONE @ 5-6/B.3-C

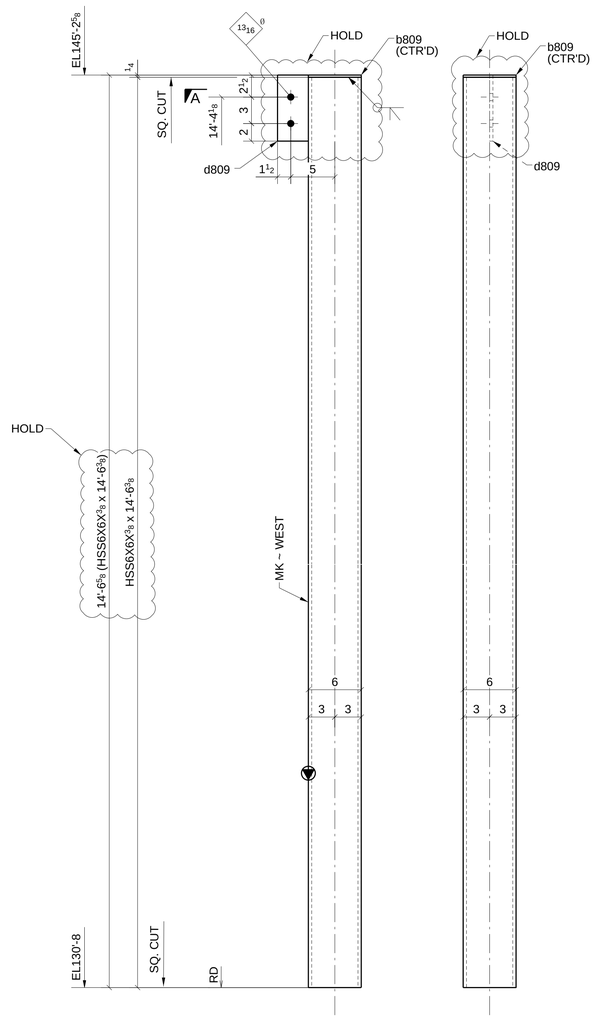

ONE - COLUMN ~ 809B

LOCATION: (REF: E8B)
ONE @ 5-6/B.3-C

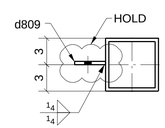

SECTION - A

MATERIAL LIST

QTY	MARK	DESCRIPTION	LENGTH	MATERIAL	NOTES
1	809A	HSS6X6X3/8	13'-8 3/4"	A500-GR.B-46	
1	b809	PL1/4"X6"	0'-6"	A36	
1	809B	HSS6X6X3/8	14'-6 3/8"	A500-GR.B-46	
1	b809	PL1/4"X6"	0'-6"	A36	
1	d809	PL3/8"X3 1/2"	0'-7 1/2"	A36	

Romac By: Checked By:
Beamline By: Checked By:

A FOR APPROVAL 07/08/16

Sequence: 8 Ref. E-Plans: –
Material: A992 U.N.O. Edge Dist.: 1 1/2" U.N.O.
Holes: 13/16"DIA. Bolts: NOTED
Cleaning: NONE
Paint: NO
DFT: COLOR:

ATLAS IRON WORKS
ST. LOUIS, MO.

Project: WEBSTER UNIVERSITY INTERDISCIPLINARY SCIENCE BUILDING
Customer: PARIC CORPORATION
Owner: WEBSTER UNIVERSITY
Location: WEBSTER GUOVES,MO 63119
Dwn: CL Date: 07/06/2016 Ckd: LJ Date: 07/07/2016
Job No. A16013 BAT: DWG#: 809

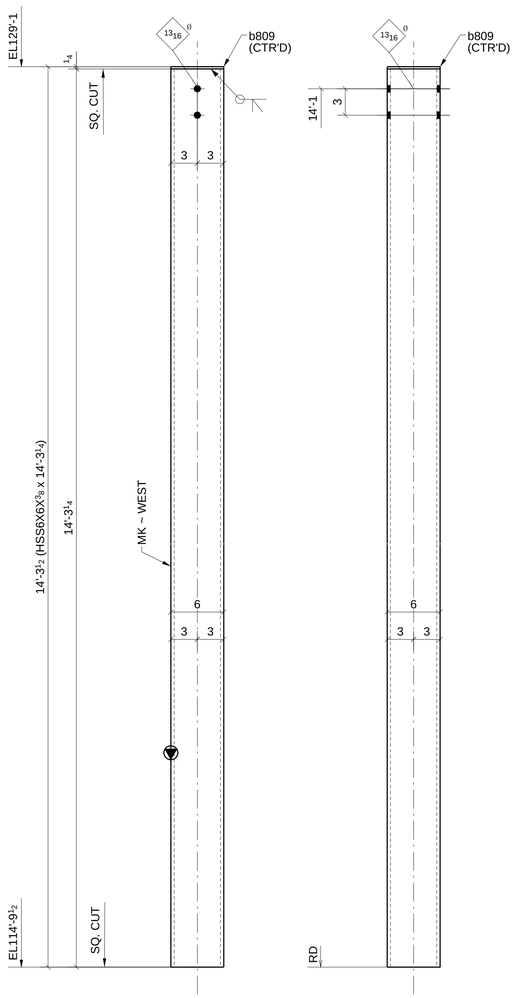

ONE - COLUMN ~ 810A

LOCATION: (REF: E8B)
ONE @ 5-6/B.3-C

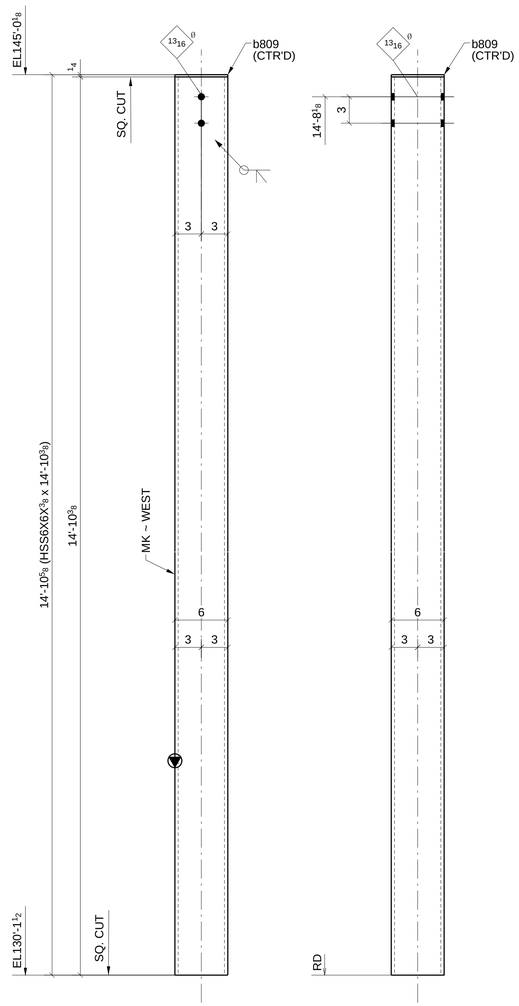

ONE - COLUMN ~ 810B

LOCATION: (REF: E8B)
ONE @ 5-6/B.3-C

MATERIAL LIST

QTY	MARK	DESCRIPTION	LENGTH	MATERIAL	NOTES
1	810A	HSS6X6X3/8	14'-3 1/4"	A500-GR.B-46	
1	b809	PL1/4"X6"	0'-6"	A36	
1	810B	HSS6X6X3/8	14'-10 3/8"	A500-GR.B-46	
1	b809	PL1/4"X6"	0'-6"	A36	

FOR APPROVAL

A	FOR APPROVAL	07/08/16

Sequence: 8 Ref. E-Plans: –
Material: A992 U.N.O. Edge Dist.: 1 1/2" U.N.O.
Holes: 13/16"DIA. Bolts: NOTED
Cleaning: NONE
Paint: NO
DFT: COLOR:

Romac By: Checked By:
Beamline By: Checked By:

ATLAS IRON WORKS
ST. LOUIS, MO.

Project: WEBSTER UNIVERSITY INTERDISCIPLINARY SCIENCE BUILDING
Customer: PARIC CORPORATION
Owner: WEBSTER UNIVERSITY
Location: WEBSTER GUOVES,MO 63119
Dwn: CL Date: 07/06/2016 Ckd: LJ Date: 07/07/2016
Job No. A16013 BAT: DWG#: 810

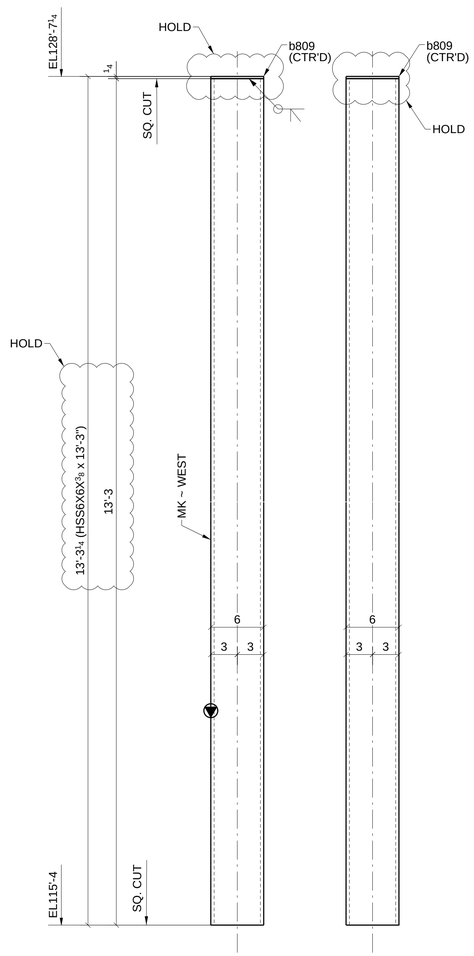

ONE - COLUMN ~ 811A

LOCATION: (REF: E8B)
ONE @ 5-6/B.3-C

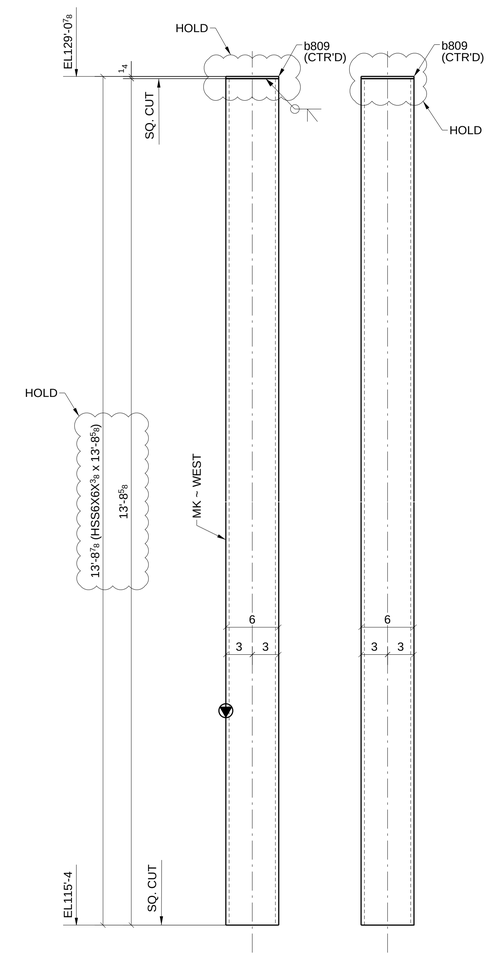

ONE - COLUMN ~ 811B

LOCATION: (REF: E8B)
ONE @ 5-6/B.3-C

MATERIAL LIST

QTY	MARK	DESCRIPTION	LENGTH	MATERIAL	NOTES
1	811A	HSS6X6X3/8	13'-3"	A500-GR.B-46	
1	b809	PL1/4"X6"	0'-6"	A36	
1	811B	HSS6X6X3/8	13'-8 5/8"	A500-GR.B-46	
1	b809	PL1/4"X6"	0'-6"	A36	

Romac By: Checked By:

Beamline By: Checked By:

A FOR APPROVAL 07/08/16

Sequence: 8 Ref. E-Plans: --

Material: A992 U.N.O. Edge Dist.: 1 1/2" U.N.O.

Holes: 13/16"DIA. Bolts: NOTED

Cleaning: NONE

Paint: NO

DFT: COLOR:

ATLAS IRON WORKS
ST. LOUIS, MO.

Project: WEBSTER UNIVERSITY INTERDISCIPLINARY SCIENCE BUILDING

Customer: PARIC CORPORATION

Owner: WEBSTER UNIVERSITY

Location: WEBSTER GUOVES,MO 63119

Dwn: CL Date: 07/06/2016 Ckd: LJ Date: 07/07/2016

Job No. A16013 BAT: DWG#: 811

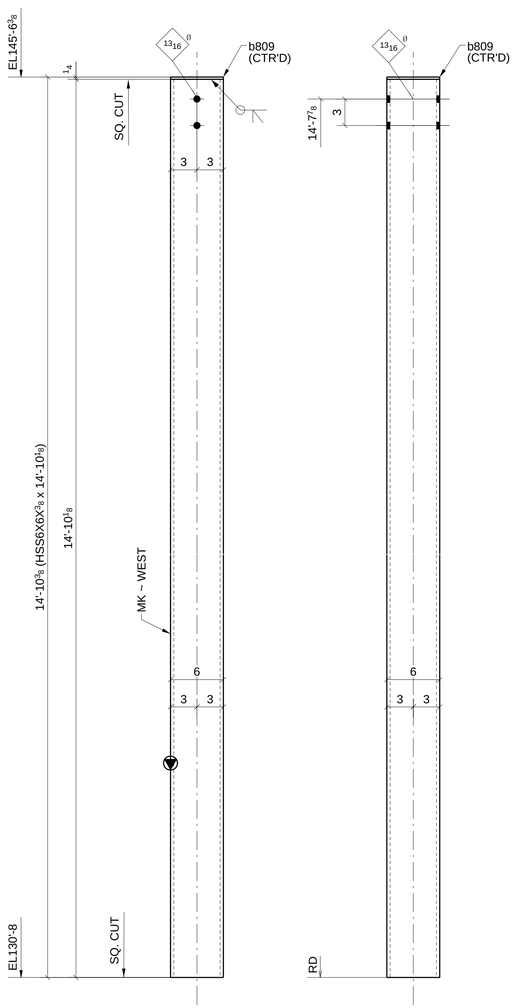

2 - COLUMNS ~ 812A

LOCATION: (REF: E8B)

ONE @ 5-6/B.3-C

ONE @ 5-6/B.3-C

MATERIAL LIST

QTY	MARK	DESCRIPTION	LENGTH	MATERIAL	NOTES
2	812A	HSS6X6X3/8	14'-10 1/8"	A500-GR.B-46	
2	b809	PL1/4"X6"	0'-6"	A36	

Romac By: Checked By:

Beamline By: Checked By:

A	FOR APPROVAL		07/08/16
Sequence:	8	Ref. E-Plans:	–
Material:	A992 U.N.O.	Edge Dist.:	1 1/2" U.N.O.
Holes:	13/16"DIA.	Bolts:	NOTED
Cleaning:	NONE		
Paint:	NO		
DFT:		COLOR:	

ATLAS IRON WORKS

ST. LOUIS, MO.

Project: WEBSTER UNIVERSITY INTERDISCIPLINARY SCIENCE BUILDING

Customer: PARIC CORPORATION

Owner: WEBSTER UNIVERSITY

Location: WEBSTER GUOVES,MO 63119

Dwn: CL Date: 07/06/2016 Ckd: LJ Date: 07/07/2016

Job No. A16013 BAT: DWG#: 812

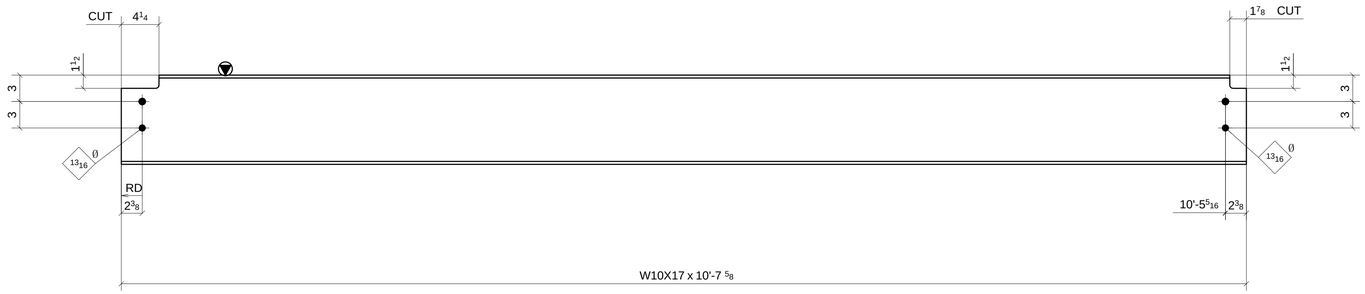

ONE - BEAM ~ 813A

LOCATION: (REF: E8A)
ONE @ 5-6/B.3-C

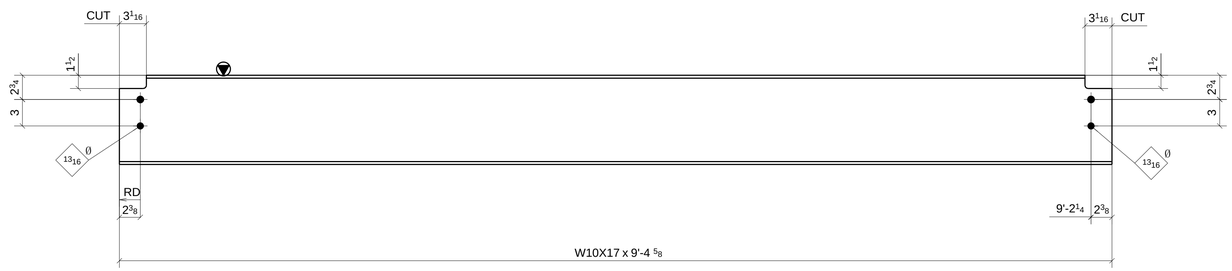

ONE - BEAM ~ 813B

LOCATION: (REF: E8A)
ONE @ 6-7/C.3-D

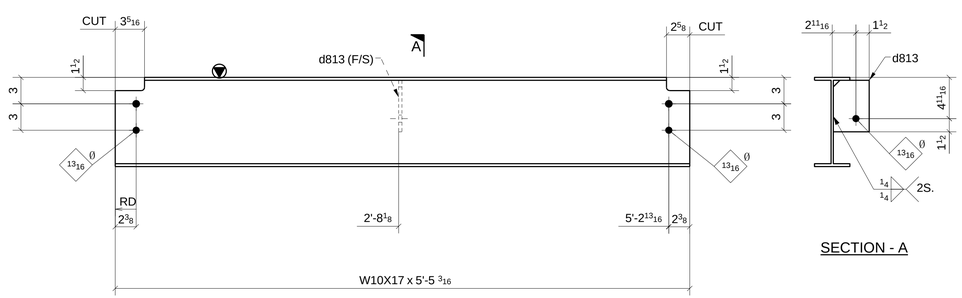

SECTION - A

ONE - BEAM ~ 813C

LOCATION: (REF: E8A)
ONE @ 7.1-8/A.6-B

SHOP BOLT IN SLOTTED HOLE
NEED "HAND TIGHTEN"

MATERIAL LIST

QTY	MARK	DESCRIPTION	LENGTH	MATERIAL	NOTES
1	813A	W10X17	10'-7 11/16"	A992	
1	813B	W10X17	9'-4 5/8"	A992	
1	813C	W10X17	5'-5 3/16"	A992	
1	d813	PL3/8"X4 1/16"	0'-5 7/8"	A36	

Romac By:		Checked By:	
Beamline By:		Checked By:	

A	FOR APPROVAL				07/08/16
Sequence:	8	Ref. E-Plans:	–		
Material:	A992 U.N.O.	Edge Dist.:	1 1/2" U.N.O.		
Holes:	13/16"DIA.	Bolts:	NOTED		
Cleaning:	NONE				
Paint:	NO				
DFT:		COLOR:			

ATLAS IRON WORKS
ST. LOUIS, MO.

Project:	WEBSTER UNIVERSITY INTERDISCIPLINARY SCIENCE BUILDING				
Customer:	PARIC CORPORATION				
Owner:	WEBSTER UNIVERSITY				
Location:	WEBSTER GUOVES,MO 63119				
Dwn: ZZ	Date: 07/06/2016	Ckd: LJ	Date: 07/07/2016		
Job No. A16013	BAT:	DWG#: 813			

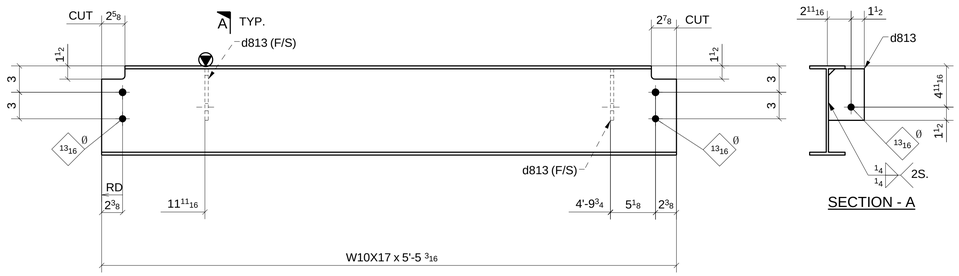

ONE - BEAM ~ 814A

LOCATION: (REF: E8A)
ONE @ 7.1-8/A.6-B

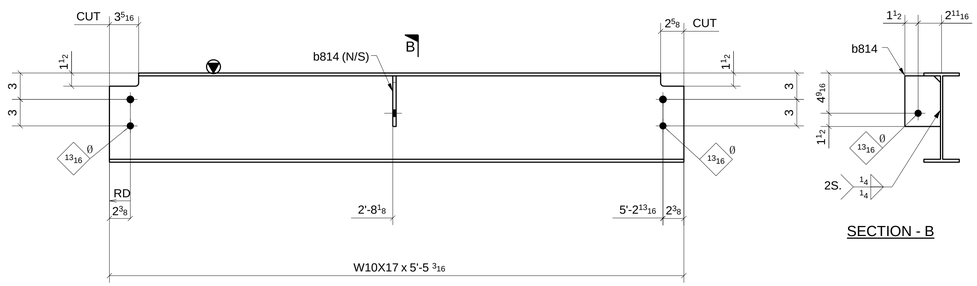

ONE - BEAM ~ 814B

LOCATION: (REF: E8A)
ONE @ 7.1-8/A.6-B

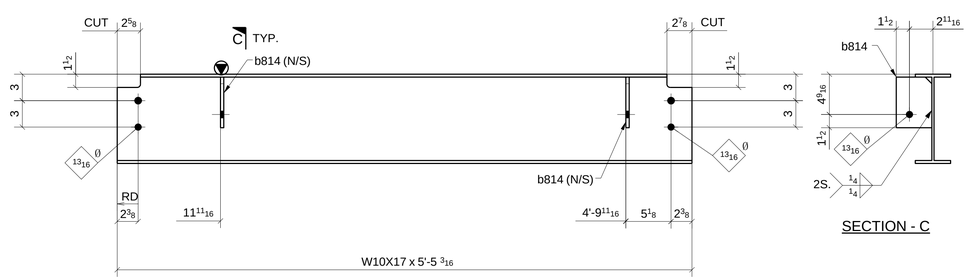

ONE - BEAM ~ 814C

LOCATION: (REF: E8A)
ONE @ 7.1-8/A.6-B

SHOP BOLT IN SLOTTED HOLE
NEED "HAND TIGHTEN"

MATERIAL LIST

QTY	MARK	DESCRIPTION	LENGTH	MATERIAL	NOTES
1	814A	W10X17	5'-5 1/4"	A992	
2	d813	PL3/8"X4 1/16"	0'-5 7/8"	A36	
1	814B	W10X17	5'-5 3/16"	A992	
1	b814	PL3/8"X4 1/16"	0'-5 3/4"	A36	
1	814C	W10X17	5'-5 1/4"	A992	
2	b814	PL3/8"X4 1/16"	0'-5 3/4"	A36	

Romac By: Checked By:
Beamline By: Checked By:

A	FOR APPROVAL	07/08/16

Sequence: 8 Ref. E-Plans: –
Material: A992 U.N.O. Edge Dist.: 1 1/2" U.N.O.
Holes: 13/16"DIA. Bolts: NOTED
Cleaning: NONE
Paint: NO
DFT: COLOR:

ATLAS IRON WORKS
ST. LOUIS, MO.

Project: WEBSTER UNIVERSITY INTERDISCIPLINARY SCIENCE BUILDING
Customer: PARIC CORPORATION
Owner: WEBSTER UNIVERSITY
Location: WEBSTER GUOVES,MO 63119
Dwn: ZZ Date: 07/06/2016 Ckd: LJ Date: 07/07/2016
Job No. A16013 BAT: DWG#: 814

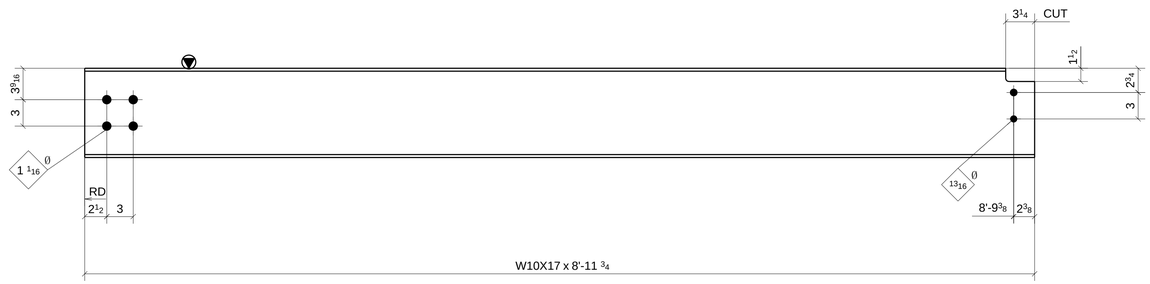

ONE - BEAM ~ 815A

LOCATION: (REF: E8A)
ONE @ 6-7/B.3

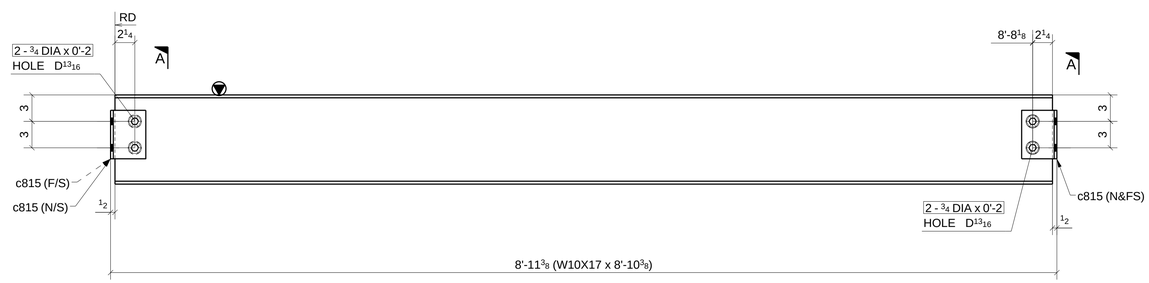

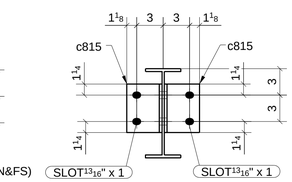

SECTION - A

ONE - BEAM ~ 815B

LOCATION: (REF: E8A)
ONE @ 6-7/D

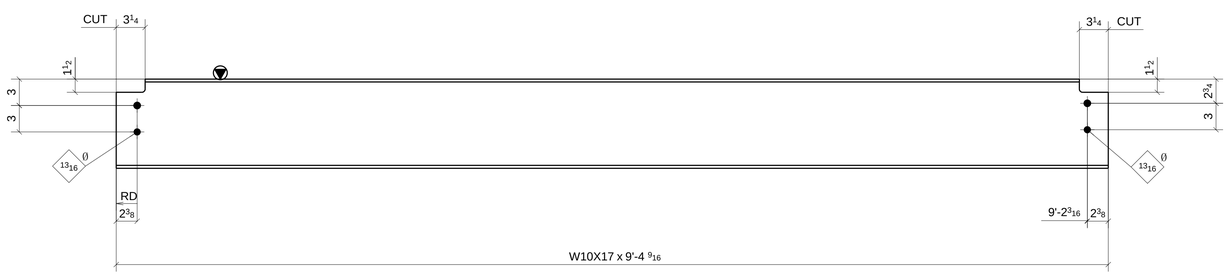

ONE - BEAM ~ 815C

LOCATION: (REF: E8A)
ONE @ 6-7/B.3-C

SHOP BOLT IN SLOTTED HOLE
NEED "HAND TIGHTEN"

FOR APPROVAL

MATERIAL LIST

QTY	MARK	DESCRIPTION	LENGTH	MATERIAL	NOTES
1	815A	W10X17	8'-11 13/16"	A992	
1	815B	W10X17	8'-10 3/8"	A992	
4	c815	L4X4X5/16	0'-5 1/2"	A36	
4		3/4" DIA. W/N&W	0'-2"	A325N TC	
1	815C	W10X17	9'-4 9/16"	A992	

Romac By: Checked By:
Beamline By: Checked By:

A FOR APPROVAL 07/08/16

Sequence: 8 Ref. E-Plans: –
Material: A992 U.N.O. Edge Dist.: 1 1/2" U.N.O.
Holes: 13/16"DIA. Bolts: NOTED
Cleaning: NONE
Paint: NO
DFT: COLOR:

ATLAS IRON WORKS
ST. LOUIS, MO.

Project: WEBSTER UNIVERSITY INTERDISCIPLINARY SCIENCE BUILDING
Customer: PARIC CORPORATION
Owner: WEBSTER UNIVERSITY
Location: WEBSTER GUOVES,MO 63119
Dwn: ZZ Date: 07/06/2016 Ckd: LJ Date: 07/07/2016
Job No. A16013 BAT: DWG#: 815

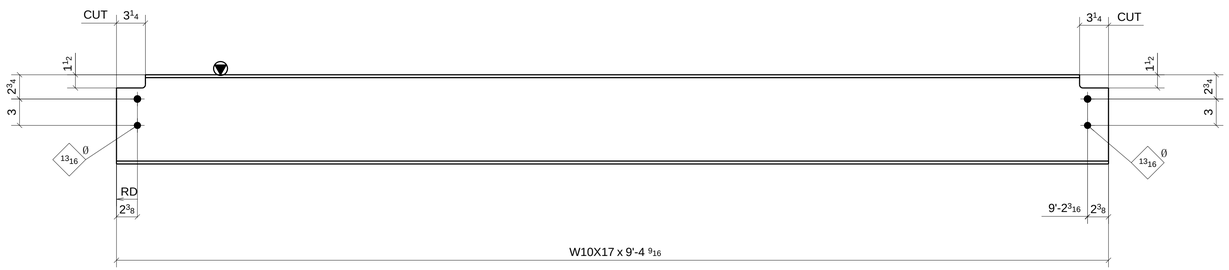

ONE - BEAM ~ 816A

LOCATION: (REF: E8A)
ONE @ 6-7/B.3-C

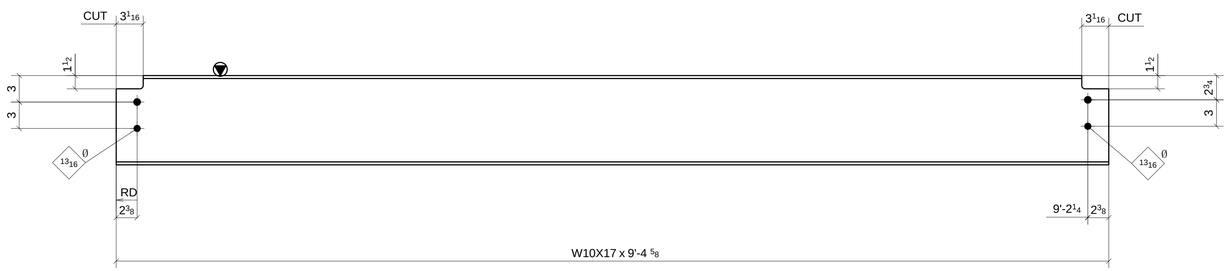

ONE - BEAM ~ 816B

LOCATION: (REF: E8A)
ONE @ 6-7/C.3

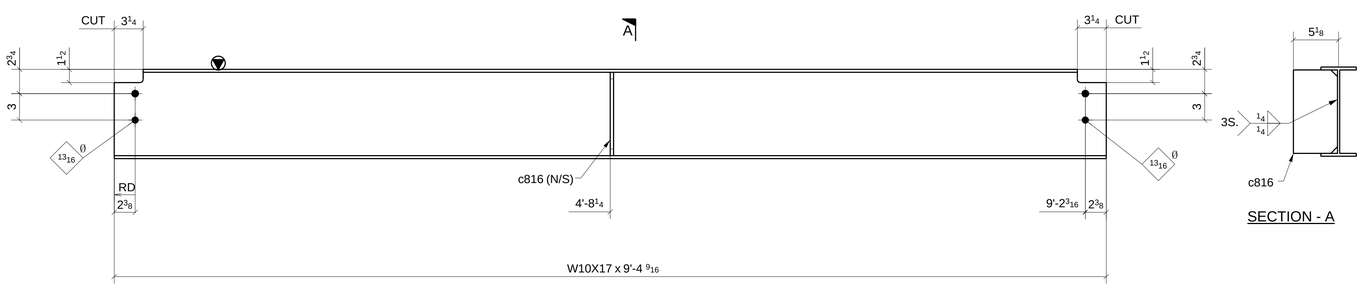

SECTION - A

ONE - BEAM ~ 816C

LOCATION: (REF: E8A)
ONE @ 6-7/B-B.3

SHOP BOLT IN SLOTTED HOLE
NEED "HAND TIGHTEN"

MATERIAL LIST

QTY	MARK	DESCRIPTION	LENGTH	MATERIAL	NOTES
1	816A	W10X17	9'-4 9/16"	A992	
1	816B	W10X17	9'-4 5/8"	A992	
1	816C	W10X17	9'-4 9/16"	A992	
1	c816	PL3/8"X5"	0'-9 7/16"	A36	

Romac By: Checked By:
Beamline By: Checked By:

A FOR APPROVAL 07/08/16

Sequence: 8 Ref. E-Plans: --
Material: A992 U.N.O. Edge Dist.: 1 1/2" U.N.O.
Holes: 13/16"DIA. Bolts: NOTED
Cleaning: NONE
Paint: NO
DFT: COLOR:

ATLAS IRON WORKS
ST. LOUIS, MO.

Project: WEBSTER UNIVERSITY INTERDISCIPLINARY SCIENCE BUILDING
Customer: PARIC CORPORATION
Owner: WEBSTER UNIVERSITY
Location: WEBSTER GUOVES,MO 63119
Dwn: ZZ Date: 07/06/2016 Ckd: LJ Date: 07/06/2016
Job No. A16013 BAT: DWG#: 816

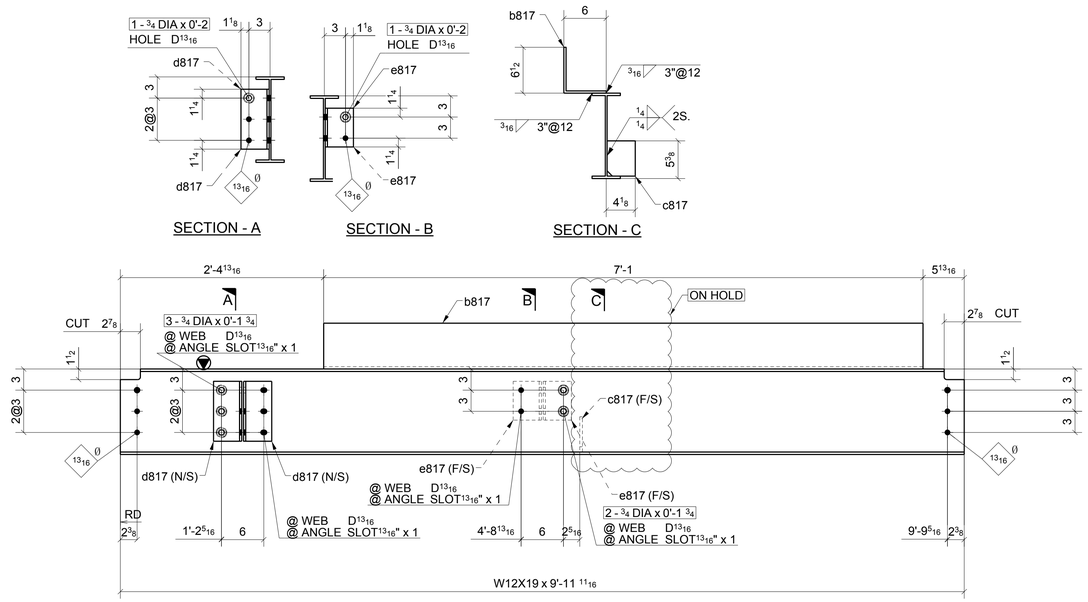

ONE - BEAM ~ 817A

LOCATION: (REF: E8A)
ONE @ 5-6/B.3-C

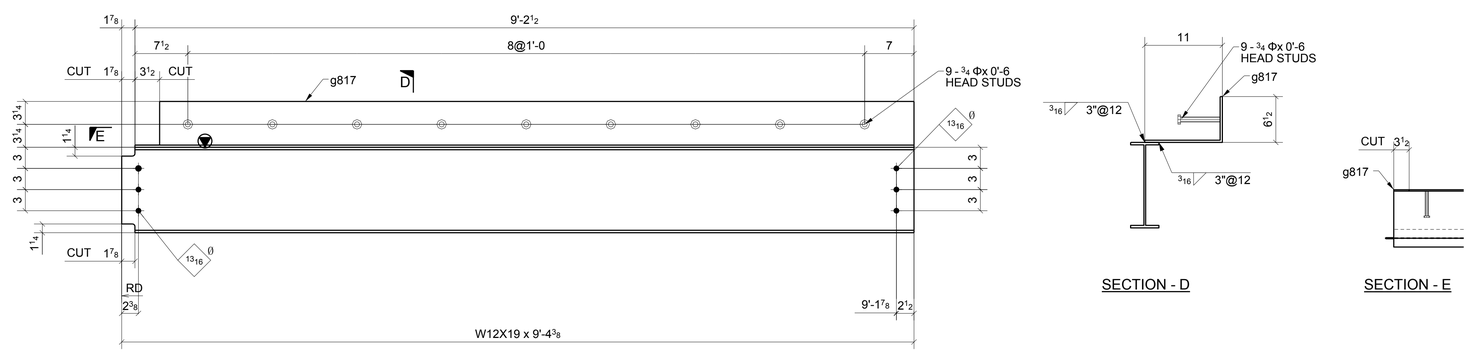

ONE - BEAM ~ 817B

LOCATION: (REF: E8A)
ONE @ 5-6/B.3-C

SHOP BOLT IN SLOTTED HOLE
NEED "HAND TIGHTEN"

MATERIAL LIST

QTY	MARK	DESCRIPTION	LENGTH	MATERIAL	NOTES
1	817A	W12X19	9'-11 11/16"	A992	
1	b817	BPL5/16"*12"1/2	7'-1"	A36	
1	c817	PL3/8"X4"	0'-5"	A36	ON HOLD
2	d817	L4X4X5/16	0'-8 1/2"	A36	
2	e817	L4X4X5/16	0'-5 1/2"	A36	
2		3/4" DIA. W/N&W	0'-1 3/4"	A325N TC	
2		3/4" DIA. W/N&W	0'-2"	A325N TC	
3		3/4" DIA. W/N&W	0'-1 3/4"	A325N TC	
1	817B	W12X19	9'-4 3/8"	A992	
1	g817	BPL5/16"*17"1/2	9'-2 1/2"	A36	
9		3/4" STUD	0'-6"		

Romac By: Checked By:
Beamline By: Checked By:

A	FOR APPROVAL	07/08/16

Sequence: 8 Ref. E-Plans: –
Material: A992 U.N.O. Edge Dist.: 1 1/2" U.N.O.
Holes: 13/16"DIA. Bolts: NOTED
Cleaning: NONE
Paint: NO
DFT: COLOR:

ATLAS IRON WORKS
ST. LOUIS, MO.

Project: WEBSTER UNIVERSITY INTERDISCIPLINARY SCIENCE BUILDING
Customer: PARIC CORPORATION
Owner: WEBSTER UNIVERSITY
Location: WEBSTER GUOVES,MO 63119
Dwn: ZZ Date: 07/06/2016 Ckd: LJ Date: 07/07/2016
Job No. A16013 BAT: DWG#: 817

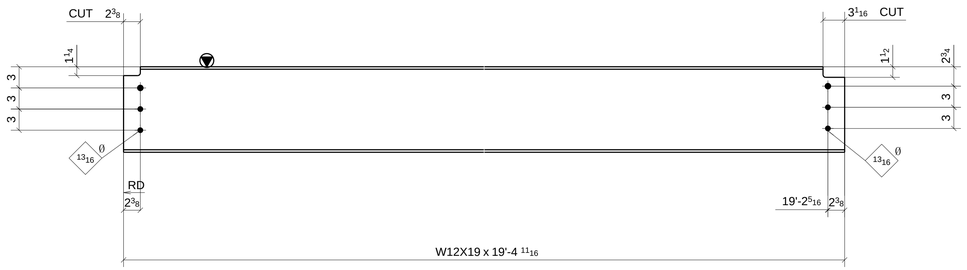

ONE - BEAM ~ 818A

LOCATION: ONE @ 5-6/C.3-D (REF: E8A)

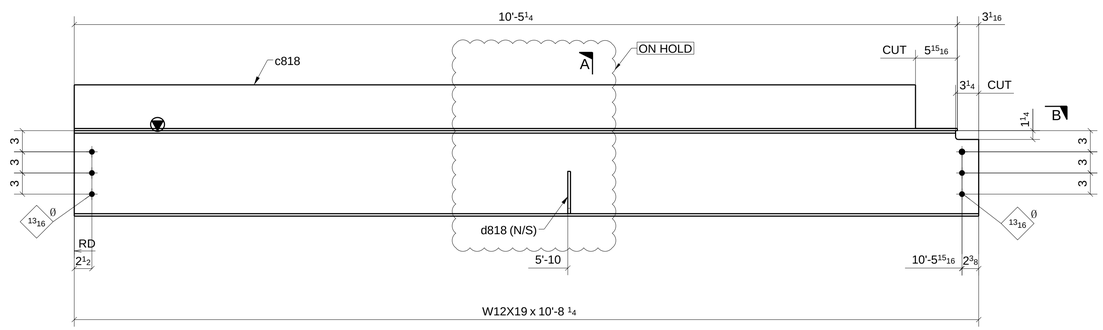

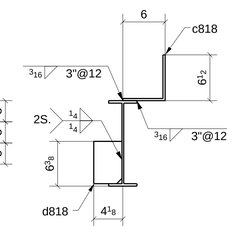

SECTION - A

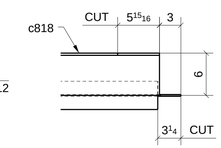

SECTION - B

ONE - BEAM ~ 818B

LOCATION: ONE @ 5-6/B.3-C (REF: E8A)

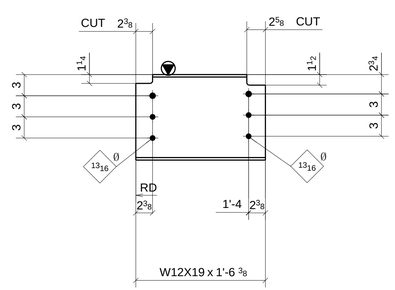

ONE - BEAM ~ 818C

LOCATION: ONE @ 7.1/A.6-B (REF: E8A)

SHOP BOLT IN SLOTTED HOLE
NEED "HAND TIGHTEN"

MATERIAL LIST

QTY	MARK	DESCRIPTION	LENGTH	MATERIAL	NOTES
1	818A	W12X19	19'-4 11/16"	A992	
1	818B	W12X19	10'-8 5/16"	A992	
1	c818	BPL5/16"*12"1/2	10'-5 1/4"	A36	
ON HOLD 1	d818	PL3/8"X4"	0'-6"	A36	
1	818C	W12X19	1'-6 3/8"	A992	

A	FOR APPROVAL		07/08/16
Sequence:	8	Ref. E-Plans:	–
Material:	A992 U.N.O.	Edge Dist.:	1 1/2" U.N.O.
Holes:	13/16"DIA.	Bolts:	NOTED
Cleaning:	NONE		
Paint:	NO		
DFT:		COLOR:	

Romac By: Checked By:

Beamline By: Checked By:

ATLAS IRON WORKS
ST. LOUIS, MO.

Project: WEBSTER UNIVERSITY INTERDISCIPLINARY SCIENCE BUILDING
Customer: PARIC CORPORATION
Owner: WEBSTER UNIVERSITY
Location: WEBSTER GUOVES,MO 63119
Dwn: ZZ Date: 07/06/2016 Ckd: LJ Date: 07/07/2016
Job No. A16013 BAT: DWG#: 818

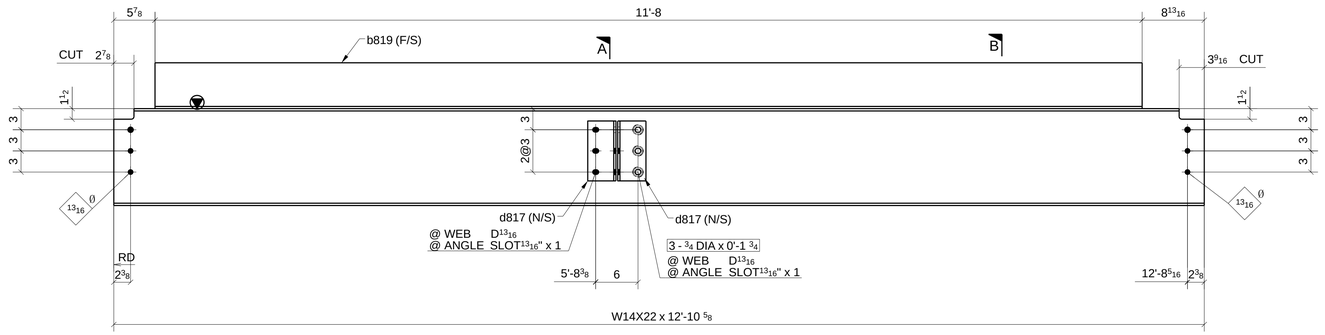

ONE - BEAM ~ 819A

LOCATION: (REF: E8A)
ONE @ 5-6/C.3-D

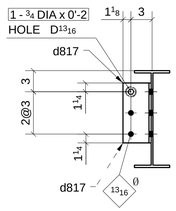

SECTION - A

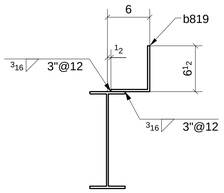

SECTION - B

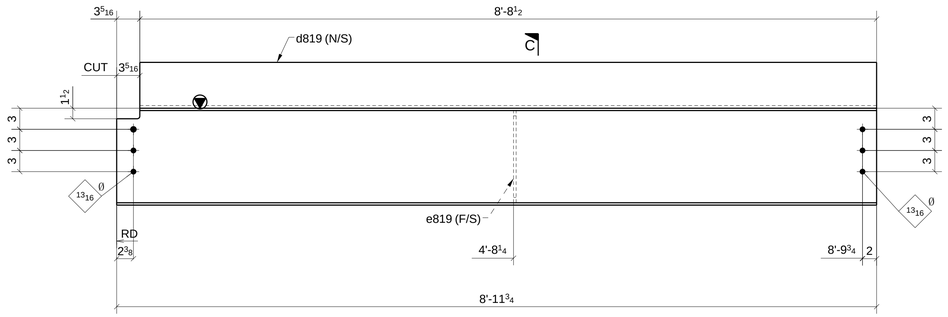

ONE - BEAM ~ 819B

LOCATION: (REF: E8A)
ONE @ 6-7/B

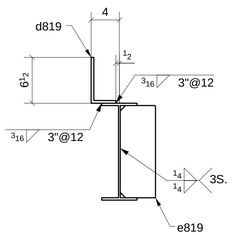

SECTION - C

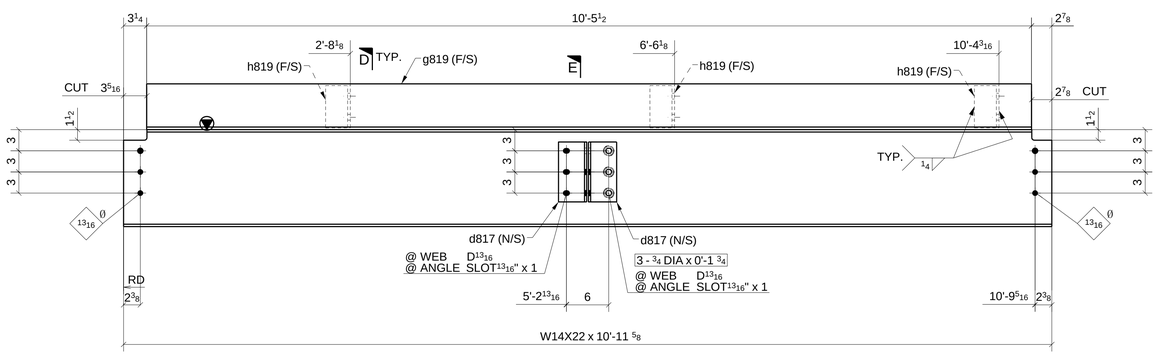

ONE - BEAM ~ 819C

LOCATION: (REF: E8A)
ONE @ 7-7.1/A.6-B

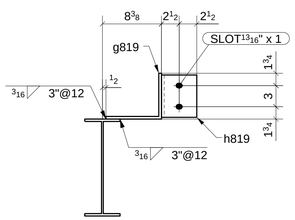

SECTION - D

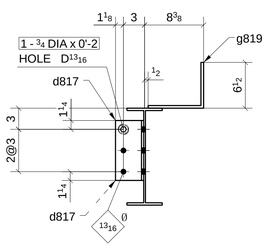

SECTION - E

SHOP BOLT IN SLOTTED HOLE
NEED "HAND TIGHTEN"

MATERIAL LIST

QTY	MARK	DESCRIPTION	LENGTH	MATERIAL	NOTES
1	819A	W14X22	12'-10 11/16"	A992	
1	b819	BPL5/16"X12"	11'-8"	A36	
2	d817	L4X4X5/16	0'-8 1/2"	A36	
3		3/4" DIA. W/N&W	0'-1 3/4"	A325N_TC	
1		3/4" DIA. W/N&W	0'-2"	A325N_TC	
1	819B	W14X22	8'-11 13/16"	A992	
1	d819	BPL3/8"X10"	8'-8 1/2"	A36	
1	e819	PL3/8"X5"	1'-1 1/16"	A36	
1	819C	W14X22	10'-11 11/16"	A992	
2	d817	L4X4X5/16	0'-8 1/2"	A36	
1	g819	BPL3/8"X14 3/8"	10'-5 1/2"	A36	
3	h819	L5X3-1/2X3/8	0'-6"	A36	
3		3/4" DIA. W/N&W	0'-1 3/4"	A325N_TC	
1		3/4" DIA. W/N&W	0'-2"	A325N_TC	

Romac By: Checked By:
Beamline By: Checked By:

ATLAS IRON WORKS
ST. LOUIS, MO.

A	FOR APPROVAL		07/08/16
Sequence:	8	Ref. E-Plans:	–
Material:	A992 U.N.O.	Edge Dist.:	1 1/2" U.N.O.
Holes:	13/16"DIA.	Bolts:	NOTED
Cleaning:	NONE		
Paint:	NO		
DFT:		COLOR:	

Project: WEBSTER UNIVERSITY INTERDISCIPLINARY SCIENCE BUILDING
Customer: PARIC CORPORATION
Owner: WEBSTER UNIVERSITY
Location: WEBSTER GUOVES,MO 63119
Dwn: ZZ Date: 07/06/2016 Ckd: LJ Date: 07/07/2016
Job No. A16013 BAT: DWG#: 819

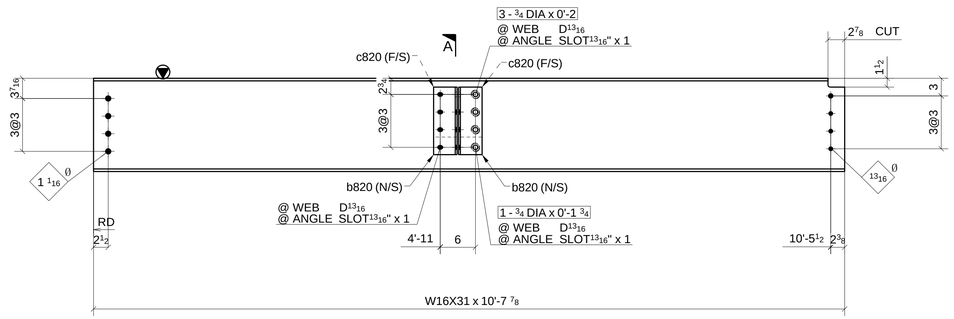

ONE - BEAM ~ 820A

LOCATION: (REF: E8A)
ONE @ 7.1/A.6-B

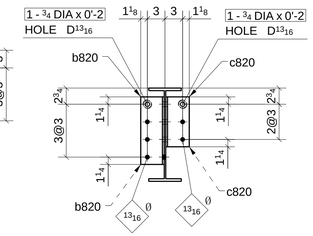

SECTION - A

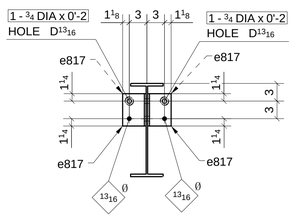

SECTION - B

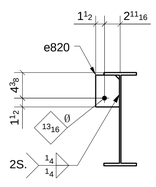

SECTION - C

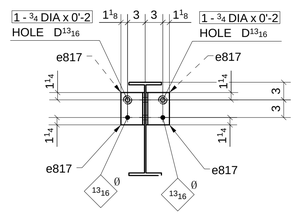

SECTION - D

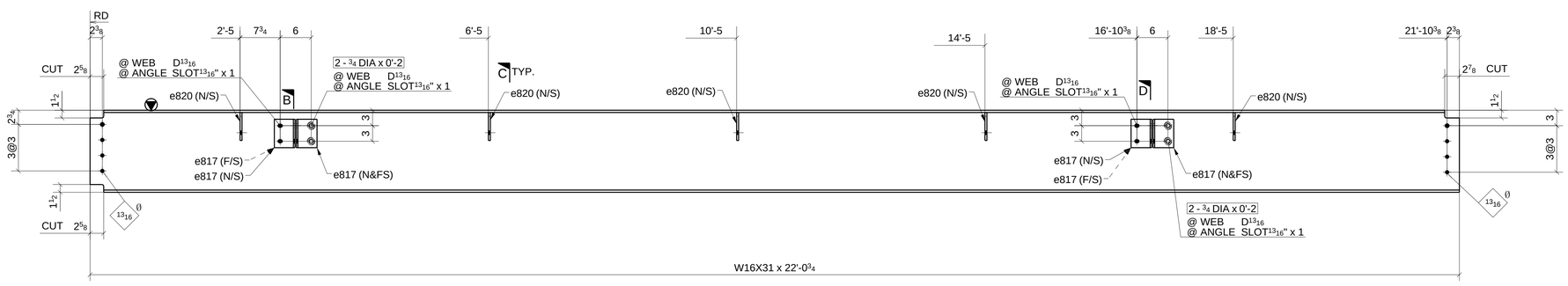

ONE - BEAM ~ 820B

LOCATION: (REF: E8A)
ONE @ 7.1-8/A.6-B

SHOP BOLT IN SLOTTED HOLE
NEED "HAND TIGHTEN"

FOR APPROVAL

MATERIAL LIST

QTY	MARK	DESCRIPTION	LENGTH	MATERIAL	NOTES
1	820A	W16X31	10'-7 7/8"	A992	
2	b820	L4X4X5/16	0'-11 1/2"	A36	
2	c820	L4X4X5/16	0'-8 1/2"	A36	
1		3/4" DIA. W/N&W	0'-1 3/4"	A325N TC	
3		3/4" DIA. W/N&W	0'-2"	A325N TC	
2		3/4" DIA. W/N&W	0'-2"	A325N TC	
1	820B	W16X31	22'-0 3/4"	A992	
8	e817	L4X4X5/16	0'-5 1/2"	A36	
5	e820	PL3/8"X4 1/16"	0'-5 7/16"	A36	
4		3/4" DIA. W/N&W	0'-2"	A325N TC	
4		3/4" DIA. W/N&W	0'-2"	A325N TC	

Romac By: Checked By:
Beamline By: Checked By:

A	FOR APPROVAL	07/08/16

Sequence: 8 Ref. E-Plans: --
Material: A992 U.N.O. Edge Dist.: 1 1/2" U.N.O.
Holes: 13/16"DIA. Bolts: NOTED
Cleaning: NONE
Paint: NO
DFT: COLOR:

ATLAS IRON WORKS
ST. LOUIS, MO.

Project: WEBSTER UNIVERSITY INTERDISCIPLINARY SCIENCE BUILDING
Customer: PARIC CORPORATION
Owner: WEBSTER UNIVERSITY
Location: WEBSTER GUOVES,MO 63119
Dwn: ZZ Date: 07/06/2016 Ckd: LJ Date: 07/06/2016
Job No. A16013 BAT: DWG#: 820

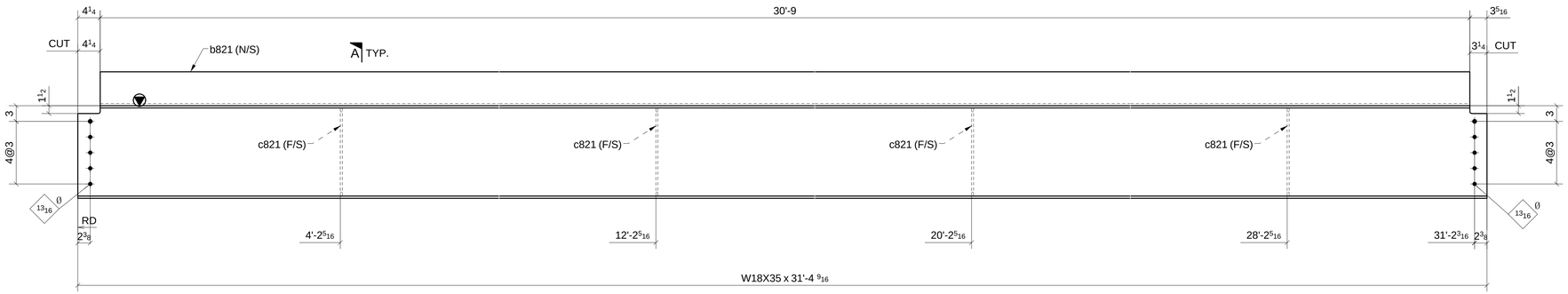

ONE - BEAM ~ 821A

LOCATION:
ONE @ 5-6/B

(REF: E8A)

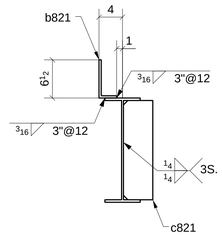

SECTION - A

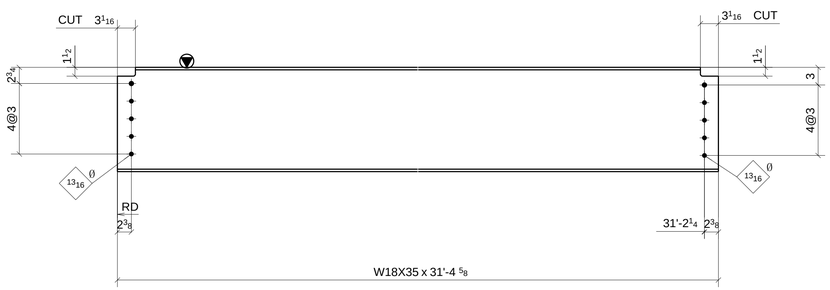

2 - BEAMS ~ 821B

LOCATION:
ONE @ 7-8/C.3
ONE @ 7-8/C.3-D

(REF: E8A)

SHOP BOLT IN SLOTTED HOLE
NEED "HAND TIGHTEN"

MATERIAL LIST

QTY	MARK	DESCRIPTION	LENGTH	MATERIAL	NOTES
1	821A	W18X35	31'-4 9/16"	A992	
1	b821	BPL3/8"X9 1/2"	30'-9"	A36	
4	c821	PL3/8"X5"	1'-4 7/8"	A36	
2	821B	W18X35	31'-4 5/8"	A992	

Romac By: Checked By:

Beamline By: Checked By:

ATLAS IRON WORKS
ST. LOUIS, MO.

A	FOR APPROVAL	07/08/16

Sequence: 8 Ref. E-Plans: –
Material: A992 U.N.O. Edge Dist.: 1 1/2" U.N.O.
Holes: 13/16"DIA. Bolts: NOTED
Cleaning: NONE
Paint: NO
DFT: COLOR:

Project: WEBSTER UNIVERSITY INTERDISCIPLINARY SCIENCE BUILDING
Customer: PARIC CORPORATION
Owner: WEBSTER UNIVERSITY
Location: WEBSTER GUOVES,MO 63119
Dwn: ZZ Date: 07/06/2016 Ckd: LJ Date: 07/07/2016
Job No. A16013 BAT: DWG#: 821

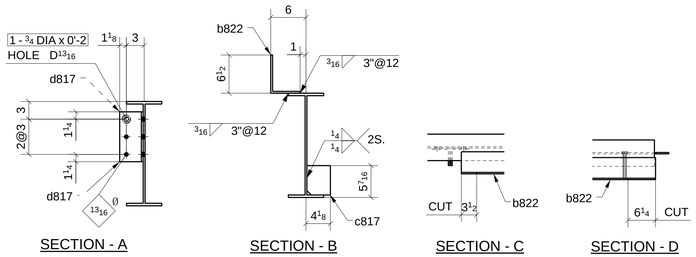

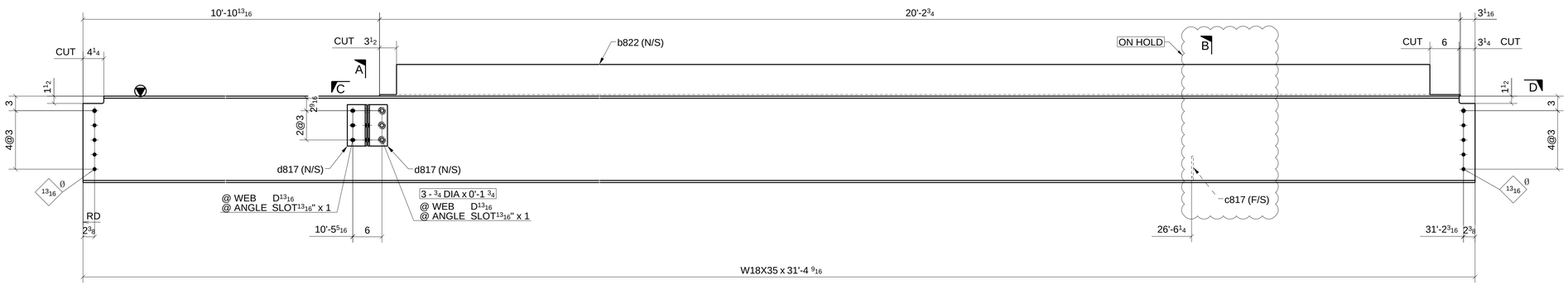

ONE - BEAM ~ 822A

LOCATION: (REF: E8A)
ONE @ 5-6/B.3-C

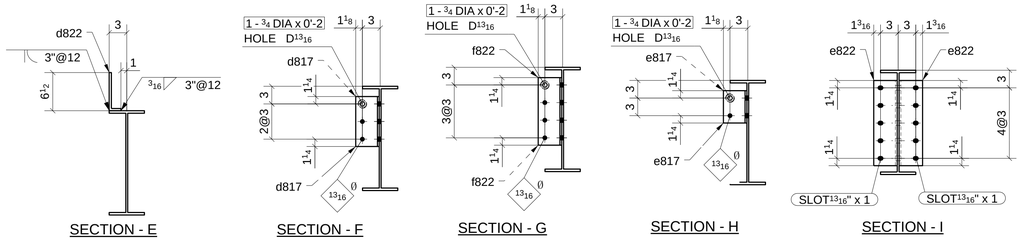

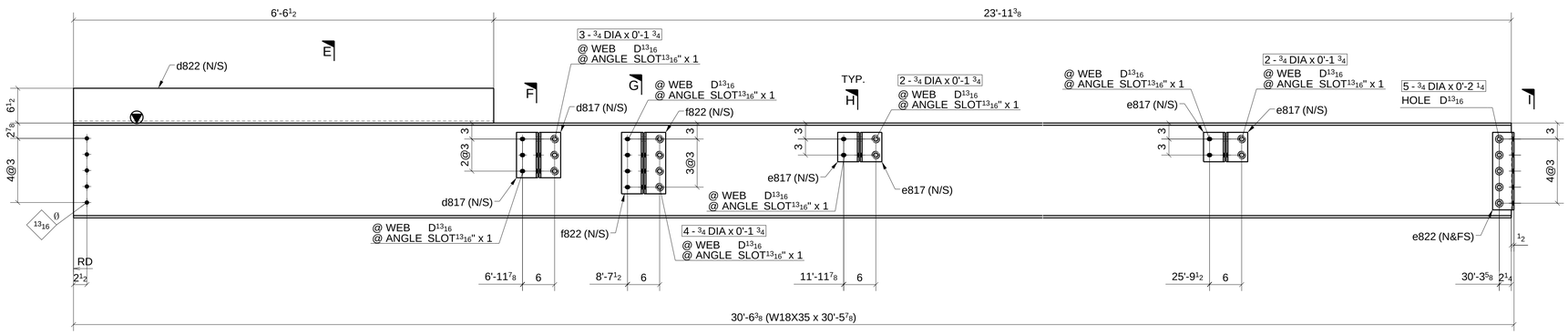

ONE - BEAM ~ 822B

LOCATION: (REF: E8A)
ONE @ 7-8/B

SHOP BOLT IN SLOTTED HOLE
NEED "HAND TIGHTEN"

MATERIAL LIST

QTY	MARK	DESCRIPTION	LENGTH	MATERIAL	NOTES
1	822A	W18X35	31'-4 9/16"	A992	
1	b822	BPL5/16"*11"1/2	20'-2 3/4"	A36	
1	c817	PL3/8"X4"	0'-5"	A36	
2	d817	L4X4X5/16	0'-8 1/2"	A36	
3		3/4" DIA. W/N&W	0'-1 3/4"	A325N_TC	
1		3/4" DIA. W/N&W	0'-2"	A325N_TC	
1	822B	W18X35	30'-5 7/8"	A992	
2	d817	L4X4X5/16	0'-8 1/2"	A36	
1	d822	BPL3/8"X8 1/2"	6'-6 1/2"	A36	
4	e817	L4X4X5/16	0'-5 1/2"	A36	
2	e822	L4X4X5/16	1'-2 1/2"	A36	
2	f822	L4X4X5/16	0'-11 1/2"	A36	
4		3/4" DIA. W/N&W	0'-1 3/4"	A325N_TC	
3		3/4" DIA. W/N&W	0'-1 3/4"	A325N_TC	
5		3/4" DIA. W/N&W	0'-2 1/4"	A325N_TC	
4		3/4" DIA. W/N&W	0'-1 3/4"	A325N_TC	
4		3/4" DIA. W/N&W	0'-2"	A325N_TC	

ON HOLD

A	FOR APPROVAL		07/08/16
Sequence:	8	Ref. E-Plans:	–
Material:	A992 U.N.O.	Edge Dist.:	1 1/2" U.N.O.
Holes:	13/16"DIA.	Bolts:	NOTED
Cleaning:	NONE		
Paint:	NO		
DFT:		COLOR:	

Romac By: Checked By:
Beamline By: Checked By:

ATLAS IRON WORKS
ST. LOUIS, MO.

Project:	WEBSTER UNIVERSITY INTERDISCIPLINARY SCIENCE BUILDING				
Customer:	PARIC CORPORATION				
Owner:	WEBSTER UNIVERSITY				
Location:	WEBSTER GUOVES,MO 63119				
Dwn: ZZ	Date: 07/06/2016	Ckd: LJ	Date: 07/07/2016		
Job No.	A16013	BAT:	DWG#: 822		

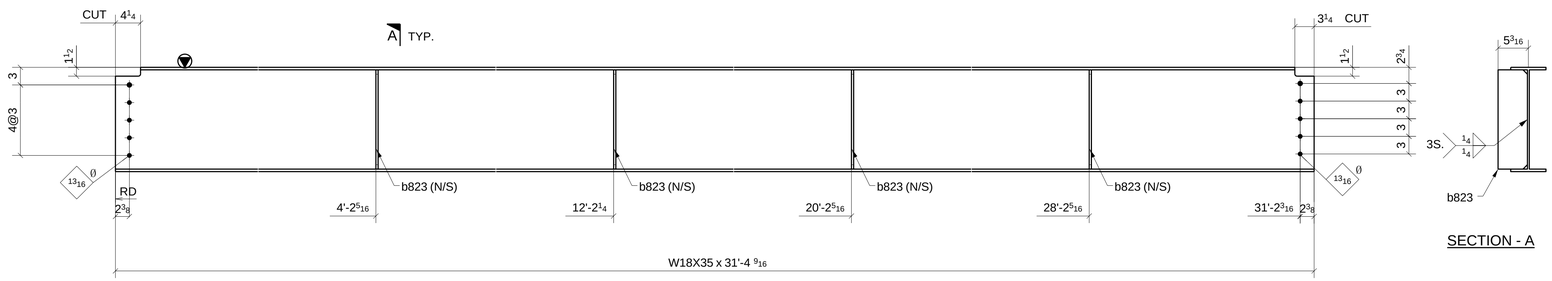

SECTION - A

ONE - BEAM ~ 823A

LOCATION: (REF: E8A)
ONE @ 5-6/B-B.3

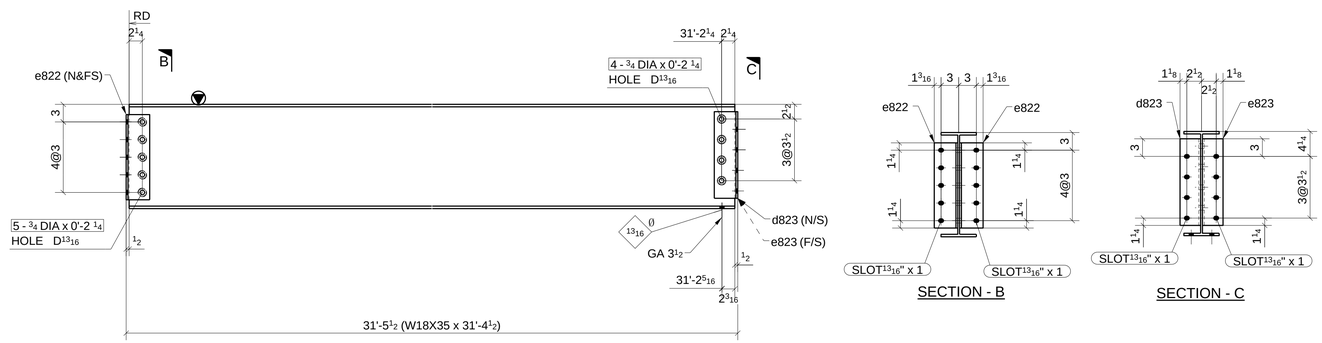

SECTION - B

SECTION - C

ONE - BEAM ~ 823B

LOCATION: (REF: E8A)
ONE @ 5-6/C

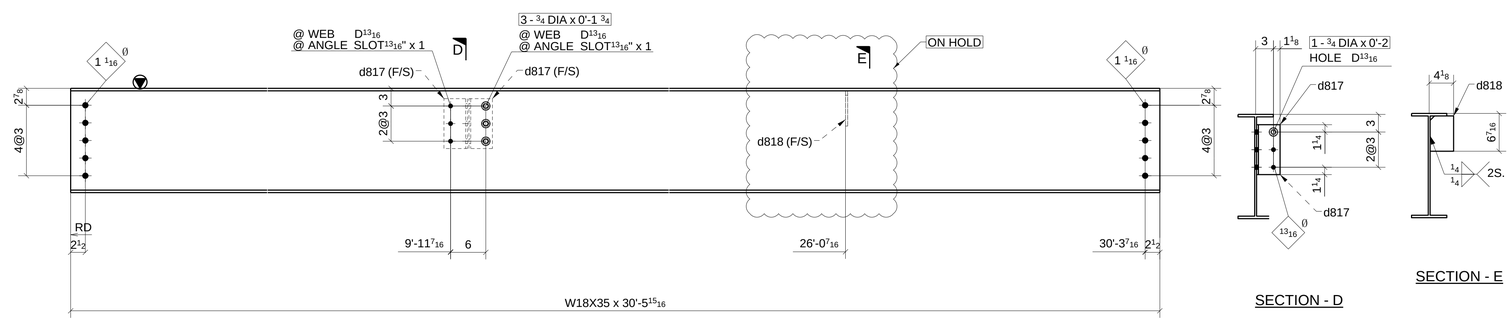

SECTION - D

SECTION - E

ONE - BEAM ~ 823C

LOCATION: (REF: E8A)
ONE @ 5-6/B.3

SHOP BOLT IN SLOTTED HOLE
NEED "HAND TIGHTEN"

MATERIAL LIST

QTY	MARK	DESCRIPTION	LENGTH	MATERIAL	NOTES
1	823A	W18X35	31'-4 9/16"	A992	
4	b823	PL3/8"X5"	1'-4 7/8"	A36	
1	823B	W18X35	31'-4 1/2"	A992	
1	d823	L4X3-1/2X5/16	1'-2 3/4"	A36	
2	e822	L4X4X5/16	1'-2 1/2"	A36	
1	e823	L4X3-1/2X5/16	1'-2 3/4"	A36	
5		3/4" DIA. W/N&W	0'-2 1/4"	A325N TC	
4		3/4" DIA. W/N&W	0'-2 1/4"	A325N TC	
1	823C	W18X35	30'-5 15/16"	A992	
2	d817	L4X4X5/16	0'-8 1/2"	A36	
ON HOLD 1	d818	PL3/8"X4"	0'-6"	A36	
1		3/4" DIA. W/N&W	0'-2"	A325N TC	
3		3/4" DIA. W/N&W	0'-1 3/4"	A325N TC	

Romac By: Checked By:
Beamline By: Checked By:

ATLAS IRON WORKS
ST. LOUIS, MO.

A	FOR APPROVAL 07/08/16
Sequence:	8
Ref. E-Plans:	–
Material:	A992 U.N.O.
Edge Dist.:	1 1/2" U.N.O.
Holes:	13/16"DIA.
Bolts:	NOTED
Cleaning:	NONE
Paint:	NO
DFT:	
COLOR:	

Project:	WEBSTER UNIVERSITY INTERDISCIPLINARY SCIENCE BUILDING
Customer:	PARIC CORPORATION
Owner:	WEBSTER UNIVERSITY
Location:	WEBSTER GUOVES,MO 63119
Dwn: ZZ	Date: 07/06/2016 Ckd: LJ Date: 07/07/2016
Job No.	A16013 BAT: DWG#: 823

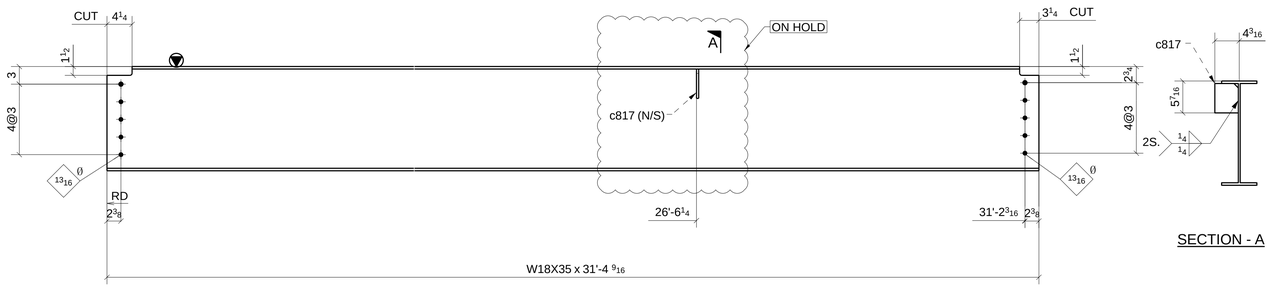

SECTION - A

ONE - BEAM ~ 824A

LOCATION:
ONE @ 5-6/B.3-C

(REF: E8A)

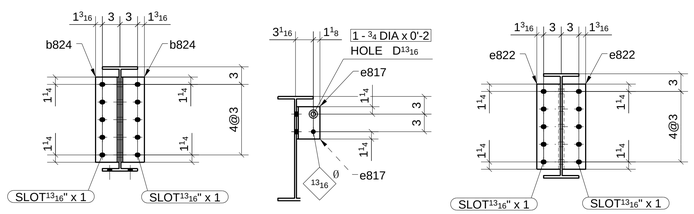

SECTION - B

SECTION - C

SECTION - D

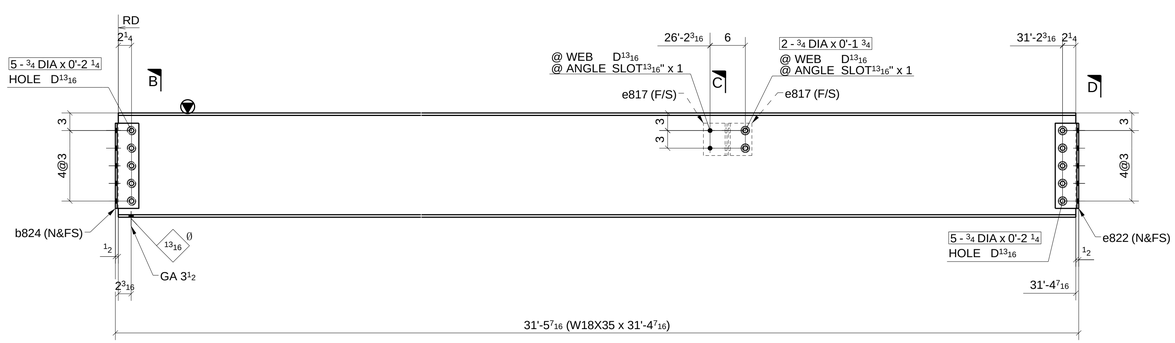

ONE - BEAM ~ 824B

LOCATION:
ONE @ 7-8/D

(REF: E8A)

SHOP BOLT IN SLOTTED HOLE
NEED "HAND TIGHTEN"

MATERIAL LIST

	QTY	MARK	DESCRIPTION	LENGTH	MATERIAL	NOTES
	1	824A	W18X35	31'-4 9/16"	A992	
ON HOLD	1	c817	PL3/8"X4"	0'-5"	A36	
	1	824B	W18X35	31'-4 7/16"	A992	
	2	b824	L4X4X5/16	1'-2 1/2"	A36	
	2	e817	L4X4X5/16	0'-5 1/2"	A36	
	2	e822	L4X4X5/16	1'-2 1/2"	A36	
	2		3/4" DIA. W/N&W	0'-1 3/4"	A325N_TC	
	1		3/4" DIA. W/N&W	0'-2"	A325N_TC	
	10		3/4" DIA. W/N&W	0'-2 1/4"	A325N_TC	

Romac By: Checked By:

Beamline By: Checked By:

A	FOR APPROVAL	07/08/16

Sequence: 8 Ref. E-Plans: –

Material: A992 U.N.O. Edge Dist.: 1 1/2" U.N.O.

Holes: 13/16"DIA. Bolts: NOTED

Cleaning: NONE

Paint: NO

DFT: COLOR:

ATLAS IRON WORKS
ST. LOUIS, MO.

Project: WEBSTER UNIVERSITY INTERDISCIPLINARY SCIENCE BUILDING

Customer: PARIC CORPORATION

Owner: WEBSTER UNIVERSITY

Location: WEBSTER GUOVES,MO 63119

Dwn: ZZ Date: 07/06/2016 Ckd: LJ Date: 07/07/2016

Job No. A16013 BAT: DWG#: 824

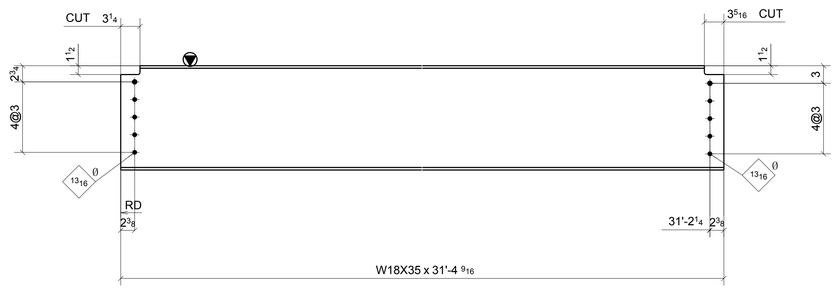

3 - BEAMS ~ 825A

LOCATION: (REF: E8A)
ONE @ 7-8/B-B.3
ONE @ 7-8/B.3-C
ONE @ 7-8/B.3-C

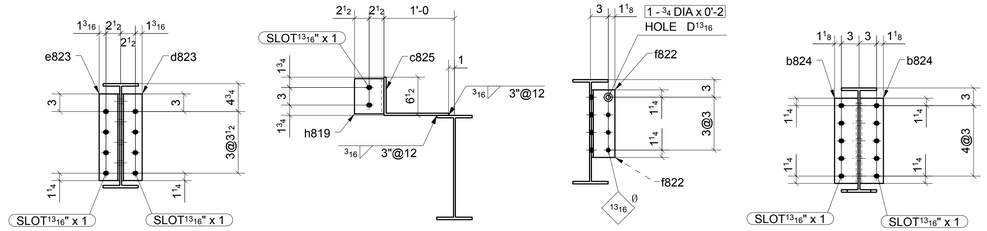

SECTION - A SECTION - B SECTION - C SECTION - D

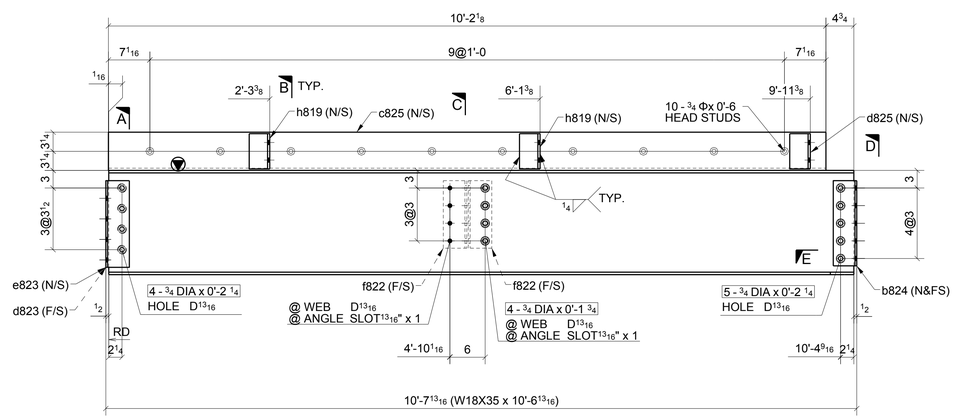

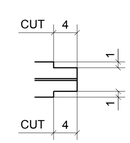

SECTION - E

ONE - BEAM ~ 825B

LOCATION: (REF: E8A)
ONE @ 8/A.6-B

SHOP BOLT IN SLOTTED HOLE
NEED "HAND TIGHTEN"

FOR APPROVAL

MATERIAL LIST

QTY	MARK	DESCRIPTION	LENGTH	MATERIAL	NOTES
3	825A	W18X35	31'-4 5/8"	A992	
1	825B	W18X35	10'-6 13/16"	A992	
2	b824	L4X4X5/16	1'-2 1/2"	A36	
1	c825	BPL3/8"X17 1/2"	10'-2 1/8"	A36	
1	d823	L4X3-1/2X5/16	1'-2 3/4"	A36	
1	d825	L5X3-1/2X3/8	0'-6"	A36	
1	e823	L4X3-1/2X5/16	1'-2 3/4"	A36	
2	f822	L4X4X5/16	0'-11 1/2"	A36	
2	h819	L5X3-1/2X3/8	0'-6"	A36	
1		3/4" DIA. W/N&W	0'-2"	A325N_TC	
5		3/4" DIA. W/N&W	0'-2 1/4"	A325N_TC	
4		3/4" DIA. W/N&W	0'-2 1/4"	A325N_TC	
4		3/4" DIA. W/N&W	0'-1 3/4"	A325N_TC	
10		3/4" STUD	0'-6"		

Romac By: Checked By:
Beamline By: Checked By:

A FOR APPROVAL 07/08/16

Sequence: 8 Ref. E-Plans: --
Material: A992 U.N.O. Edge Dist.: 1 1/2" U.N.O.
Holes: 13/16"DIA. Bolts: NOTED
Cleaning: NONE
Paint: NO
DFT: COLOR:

ATLAS IRON WORKS
ST. LOUIS, MO.

Project: WEBSTER UNIVERSITY INTERDISCIPLINARY SCIENCE BUILDING
Customer: PARIC CORPORATION
Owner: WEBSTER UNIVERSITY
Location: WEBSTER GUOVES,MO 63119
Dwn: ZZ Date: 07/06/2016 Ckd: LJ Date: 07/07/2016
Job No. A16013 BAT: DWG#: 825

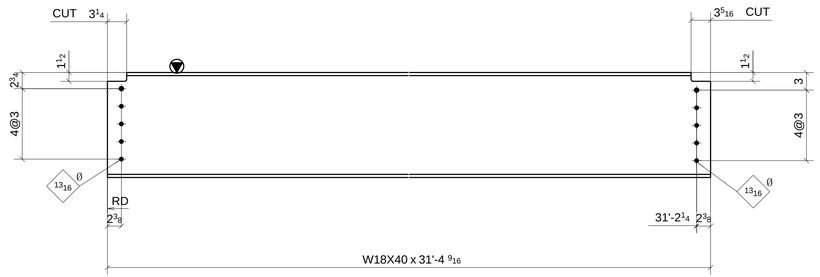

ONE - BEAM ~ 826A

LOCATION: (REF: E8A)
ONE @ 7-8/B.3

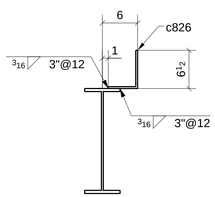

SECTION - A

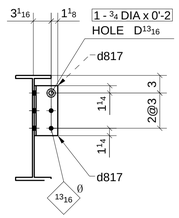

SECTION - B

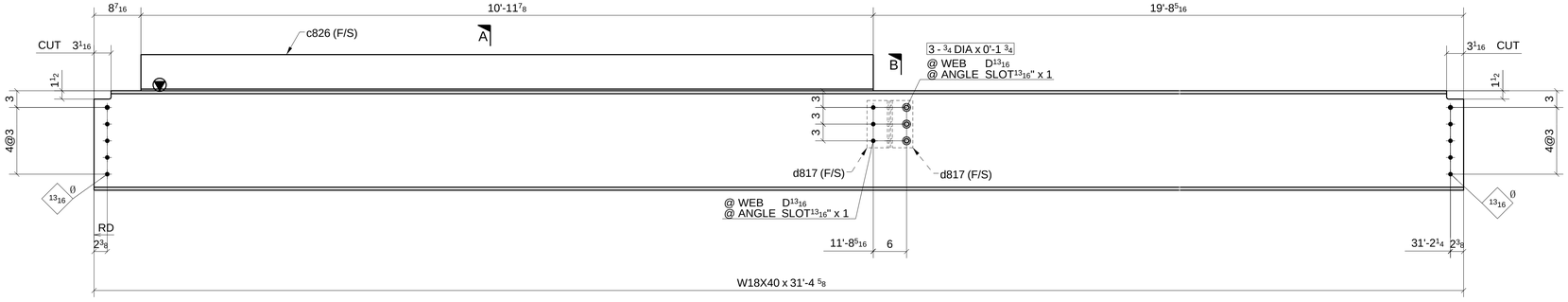

ONE - BEAM ~ 826B

LOCATION: (REF: E8A)
ONE @ 5-6/C.3

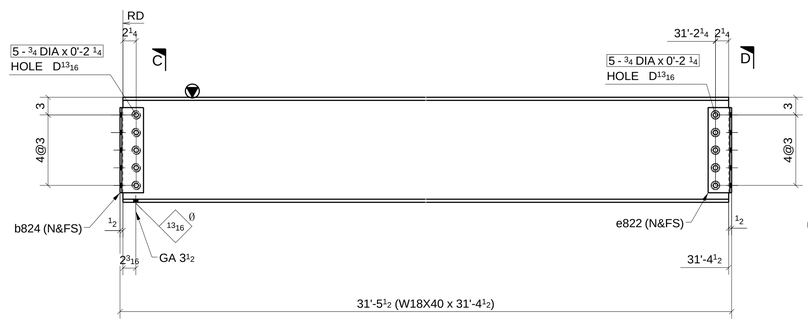

ONE - BEAM ~ 826C

LOCATION: (REF: E8A)
ONE @ 7-8/C

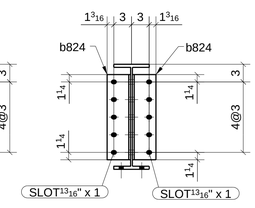

SECTION - C

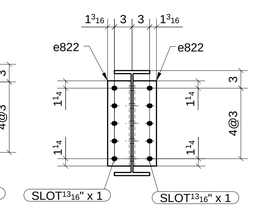

SECTION - D

SHOP BOLT IN SLOTTED HOLE
NEED "HAND TIGHTEN"

MATERIAL LIST

QTY	MARK	DESCRIPTION	LENGTH	MATERIAL	NOTES
1	826A	W18X40	31'-4 5/8"	A992	
1	826B	W18X40	31'-4 5/8"	A992	
1	c826	BPL5/16"X11 1/2"	10'-11 7/8"	A36	
2	d817	L4X4X5/16	0'-8 1/2"	A36	
1		3/4" DIA. W/N&W	0'-2"	A325N TC	
3		3/4" DIA. W/N&W	0'-1 3/4"	A325N TC	
1	826C	W18X40	31'-4 1/2"	A992	
2	b824	L4X4X5/16	1'-2 1/2"	A36	
2	e822	L4X4X5/16	1'-2 1/2"	A36	
10		3/4" DIA. W/N&W	0'-2 1/4"	A325N TC	

Romac By: Checked By:
Beamline By: Checked By:

A FOR APPROVAL 07/08/16

Sequence: 8 Ref. E-Plans: –
Material: A992 U.N.O. Edge Dist.: 1 1/2" U.N.O.
Holes: 13/16"DIA. Bolts: NOTED
Cleaning: NONE
Paint: NO
DFT: COLOR:

ATLAS IRON WORKS
ST. LOUIS, MO.

Project: WEBSTER UNIVERSITY INTERDISCIPLINARY SCIENCE BUILDING
Customer: PARIC CORPORATION
Owner: WEBSTER UNIVERSITY
Location: WEBSTER GUOVES,MO 63119
Dwn: ZZ Date: 07/06/2016 Ckd: LJ Date: 07/06/2016
Job No. A16013 BAT: DWG#: 826

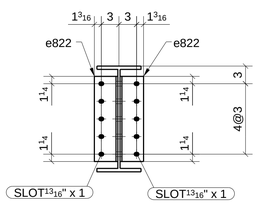

SECTION - A

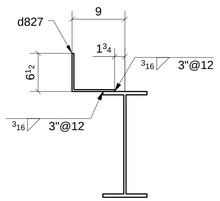

SECTION - B

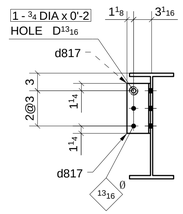

SECTION - C

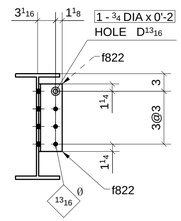

SECTION - D

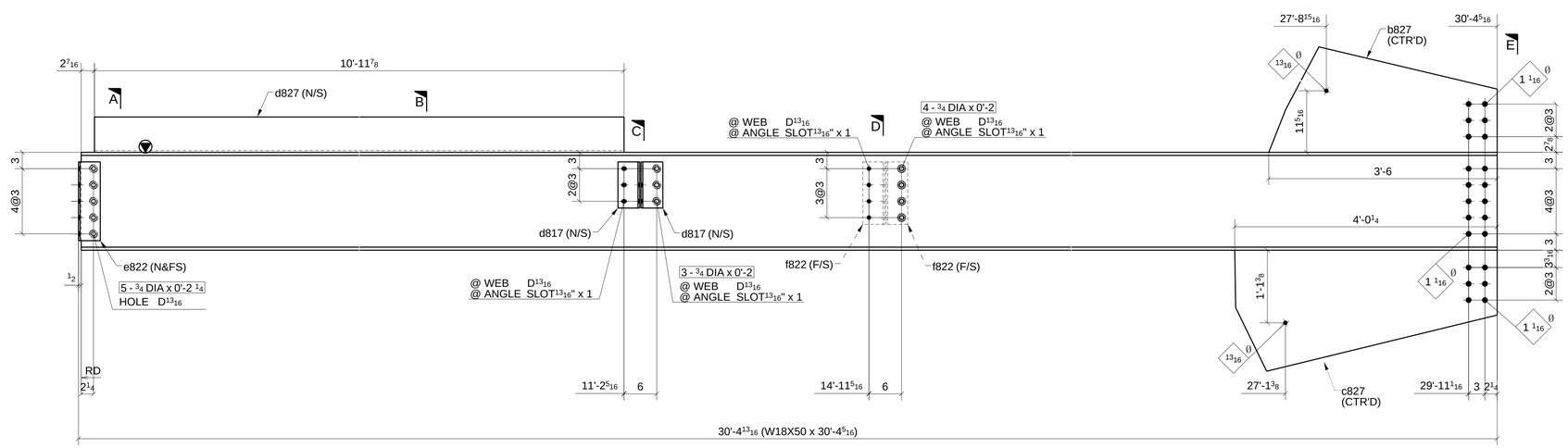

ONE - BEAM ~ 827A

LOCATION: (REF: E8A)
ONE @ 5-6/D

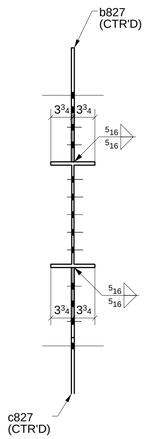

SECTION - E

SHOP BOLT IN SLOTTED HOLE
NEED "HAND TIGHTEN"

MATERIAL LIST

QTY	MARK	DESCRIPTION	LENGTH	MATERIAL	NOTES
1	827A	W18X50	30'-4 5/16"	A992	
1	b827	PL1/2"X19 3/8"	3'-6"	A572-GR.50	
1	c827	PL1/2"X22 1/4"	4'-0 1/4"	A572-GR.50	
2	d817	L4X4X5/16	0'-8 1/2"	A36	
1	d827	BPL5/16"X13 3/4"	10'-11 7/8"	A36	
2	e822	L4X4X5/16	1'-2 1/2"	A36	
2	f822	L4X4X5/16	0'-11 1/2"	A36	
3		3/4" DIA. W/N&W	0'-2"	A325N_TC	
4		3/4" DIA. W/N&W	0'-2"	A325N_TC	
5		3/4" DIA. W/N&W	0'-2 1/4"	A325N_TC	
2		3/4" DIA. W/N&W	0'-2"	A325N_TC	

Romac By: Checked By:

Beamline By: Checked By:

A	FOR APPROVAL	07/08/16

Sequence: 8 Ref. E-Plans: –
Material: A992 U.N.O. Edge Dist.: 1 1/2" U.N.O.
Holes: 13/16"DIA. Bolts: NOTED
Cleaning: NONE
Paint: NO
DFT: COLOR:

ATLAS IRON WORKS
ST. LOUIS, MO.

Project: WEBSTER UNIVERSITY INTERDISCIPLINARY SCIENCE BUILDING
Customer: PARIC CORPORATION
Owner: WEBSTER UNIVERSITY
Location: WEBSTER GUOVES,MO 63119
Dwn: ZZ Date: 07/06/2016 Ckd: LJ Date: 07/06/2016
Job No. A16013 BAT: DWG#: 827

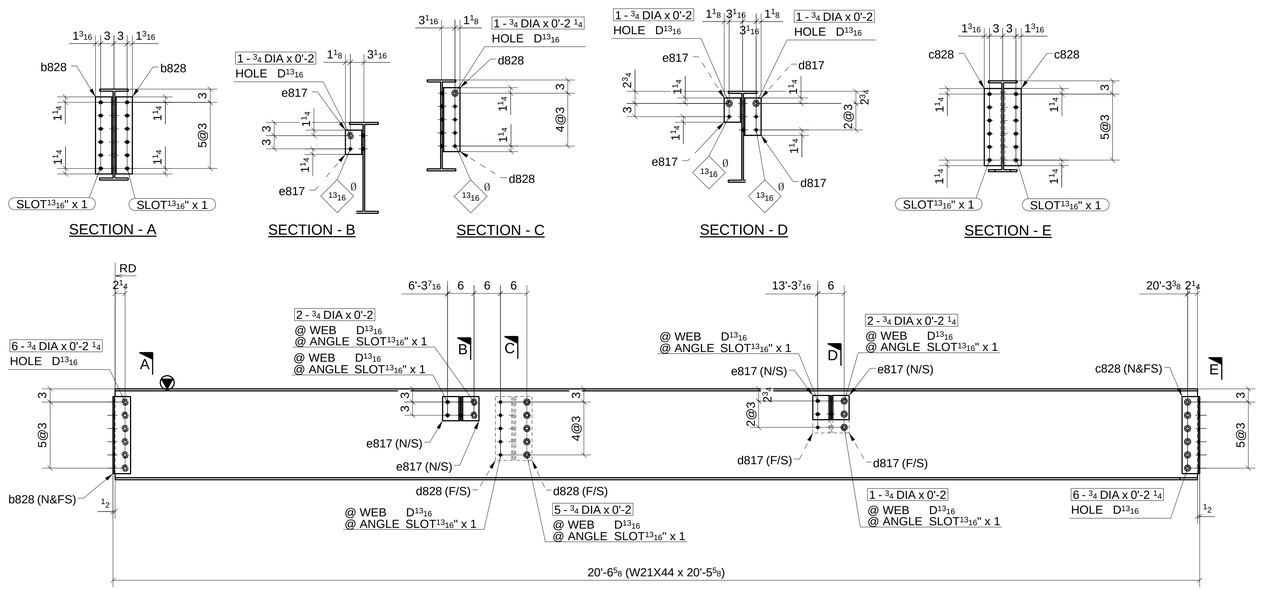

ONE - BEAM ~ 828A

LOCATION: (REF: E8A)
ONE @ 6/C-D

SHOP BOLT IN SLOTTED HOLE
NEED "HAND TIGHTEN"

MATERIAL LIST

QTY	MARK	DESCRIPTION	LENGTH	MATERIAL	NOTES
1	828A	W21X44	20'-5 5/8"	A992	
2	b828	L4X4X5/16	1'-5 1/2"	A36	
2	c828	L4X4X5/16	1'-5 1/2"	A36	
2	d817	L4X4X5/16	0'-8 1/2"	A36	
2	d828	L4X4X5/16	1'-2 1/2"	A36	
4	e817	L4X4X5/16	0'-5 1/2"	A36	
2		3/4" DIA. W/N&W	0'-2"	A325N TC	
5		3/4" DIA. W/N&W	0'-2"	A325N TC	
1		3/4" DIA. W/N&W	0'-2 1/4"	A325N TC	
2		3/4" DIA. W/N&W	0'-2 1/4"	A325N TC	
4		3/4" DIA. W/N&W	0'-2"	A325N TC	
12		3/4" DIA. W/N&W	0'-2 1/4"	A325N TC	

Romac By: Checked By:
Beamline By: Checked By:

A FOR APPROVAL 07/08/16

Sequence: 8 Ref. E-Plans: –
Material: A992 U.N.O. Edge Dist.: 1 1/2" U.N.O.
Holes: 13/16"DIA. Bolts: NOTED
Cleaning: NONE
Paint: NO
DFT: COLOR:

ATLAS IRON WORKS
ST. LOUIS, MO.

Project: WEBSTER UNIVERSITY INTERDISCIPLINARY SCIENCE BUILDING
Customer: PARIC CORPORATION
Owner: WEBSTER UNIVERSITY
Location: WEBSTER GUOVES,MO 63119
Dwn: ZZ Date: 07/06/2016 Ckd: LJ Date: 07/06/2016
Job No. A16013 BAT: DWG#: 828

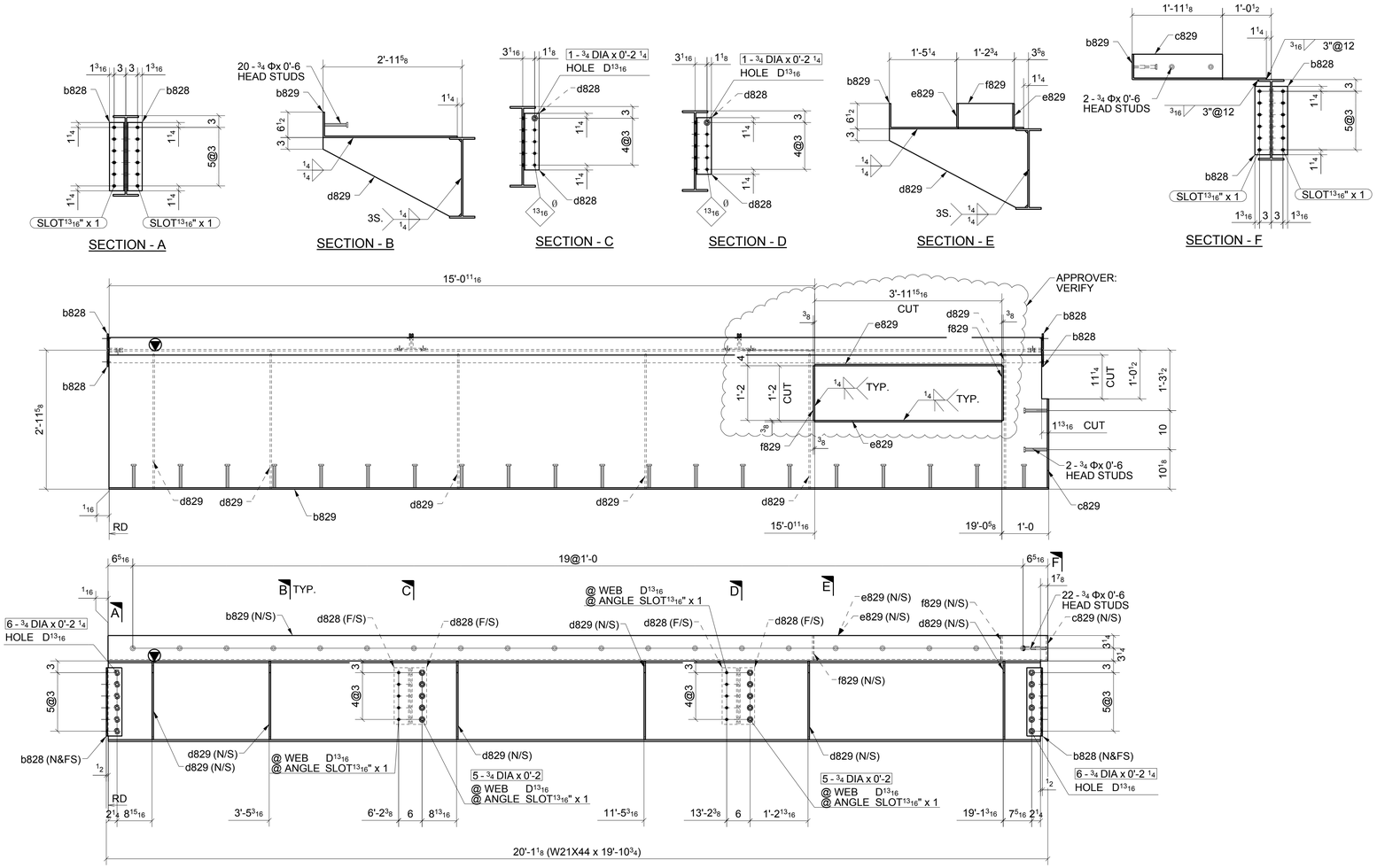

ONE - BEAM ~ 829A

LOCATION: (REF: E8A)
ONE @ 8/C-D

SHOP BOLT IN SLOTTED HOLE
NEED "HAND TIGHTEN"

MATERIAL LIST

QTY	MARK	DESCRIPTION	LENGTH	MATERIAL	NOTES
1	829A	W21X44	19'-10 3/4"	A992	
4	b828	L4X4X5/16	1'-5 1/2"	A36	
1	b829	BPL3/8"X40 7/8"	20'-0 11/16	A36	
1	c829	PL3/8"X6 1/8"	1'-10 3/4"	A36	
4	d828	L4X4X5/16	1'-2 1/2"	A36	
6	d829	PL3/8"X20 3/16"	2'-11 7/16"	A36	
2	e829	PL3/8"X6 1/8"	3'-11 15/16	A36	
2	f829	PL3/8"X6 1/8"	1'-2"	A36	
2		3/4" DIA. W/N&W	0'-2 1/4"	A325N_TC	
10		3/4" DIA. W/N&W	0'-2"	A325N_TC	
12		3/4" DIA. W/N&W	0'-2 1/4"	A325N_TC	
2		3/4" STUD	0'-6"		
20		3/4" STUD	0'-6"		

Romac By: Checked By:
Beamline By: Checked By:

A	FOR APPROVAL	07/08/16

Sequence: 8 Ref. E-Plans: –
Material: A992 U.N.O. Edge Dist.: 1 1/2" U.N.O.
Holes: 13/16"DIA. Bolts: NOTED
Cleaning: NONE
Paint: NO
DFT: COLOR:

ATLAS IRON WORKS
ST. LOUIS, MO.

Project: WEBSTER UNIVERSITY INTERDISCIPLINARY SCIENCE BUILDING
Customer: PARIC CORPORATION
Owner: WEBSTER UNIVERSITY
Location: WEBSTER GUOVES,MO 63119
Dwn: ZZ Date: 07/06/2016 Ckd: LJ Date: 07/08/2016
Job No. A16013 BAT: DWG#: 829

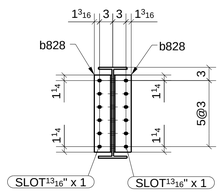

SECTION - A

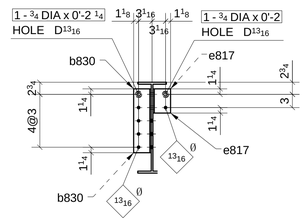

SECTION - B

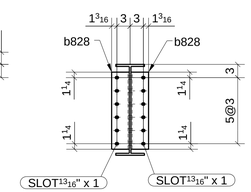

SECTION - C

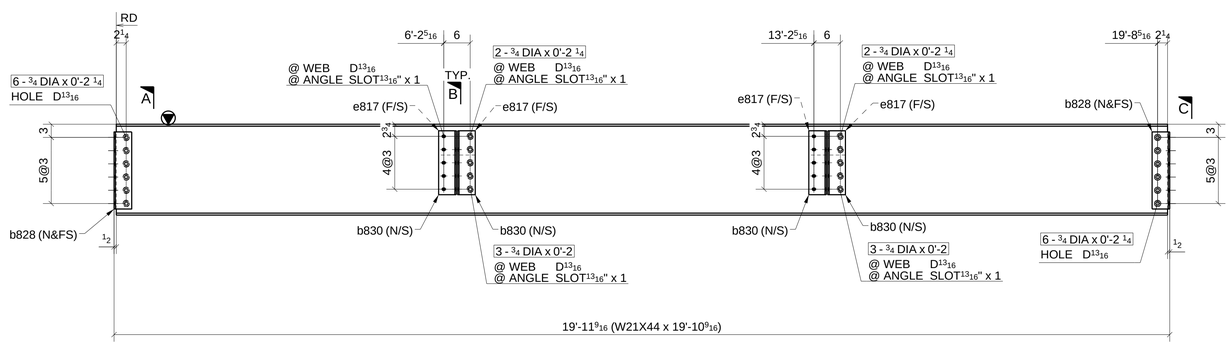

ONE - BEAM ~ 830A

LOCATION:
ONE @ 7/C-D

(REF: E8A)

SHOP BOLT IN SLOTTED HOLE
NEED "HAND TIGHTEN"

FOR APPROVAL

MATERIAL LIST

QTY	MARK	DESCRIPTION	LENGTH	MATERIAL	NOTES
1	830A	W21X44	19'-10 9/16"	A992	
4	b828	L4X4X5/16	1'-5 1/2"	A36	
4	b830	L4X4X5/16	1'-2 1/2"	A36	
4	e817	L4X4X5/16	0'-5 1/2"	A36	
2		3/4" DIA. W/N&W	0'-2"	A325N_TC	
2		3/4" DIA. W/N&W	0'-2 1/4"	A325N_TC	
4		3/4" DIA. W/N&W	0'-2 1/4"	A325N_TC	
6		3/4" DIA. W/N&W	0'-2"	A325N_TC	
12		3/4" DIA. W/N&W	0'-2 1/4"	A325N_TC	

Romac By:		Checked By:	
Beamline By:		Checked By:	

ATLAS IRON WORKS
ST. LOUIS, MO.

A	FOR APPROVAL		07/08/16
Sequence:	8	Ref. E-Plans:	–
Material:	A992 U.N.O.	Edge Dist.:	1 1/2" U.N.O.
Holes:	13/16"DIA.	Bolts:	NOTED
Cleaning:	NONE		
Paint:	NO		
DFT:		COLOR:	

Project:	WEBSTER UNIVERSITY INTERDISCIPLINARY SCIENCE BUILDING		
Customer:	PARIC CORPORATION		
Owner:	WEBSTER UNIVERSITY		
Location:	WEBSTER GUOVES,MO 63119		
Dwn: ZZ	Date: 07/06/2016	Ckd: LJ	Date: 07/07/2016
Job No. A16013	BAT:	DWG#: 830	

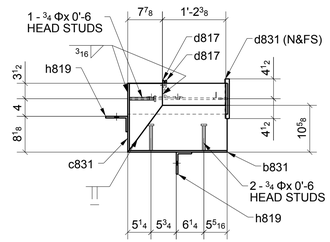

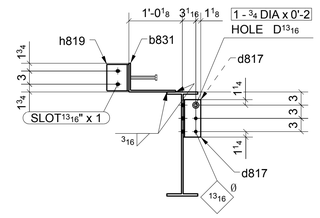

SECTION - B

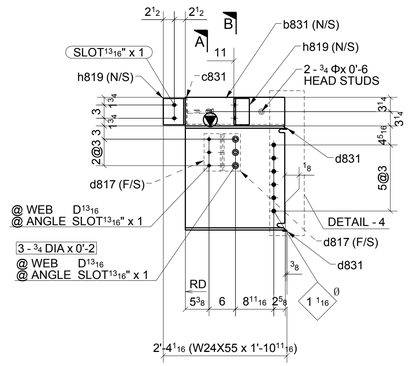

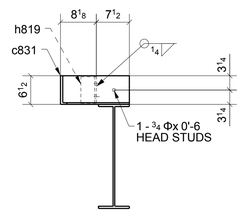

SECTION - A

ONE - BEAM ~ 831A

LOCATION: ONE @ 7-7.1/A.6 (REF: E8A)

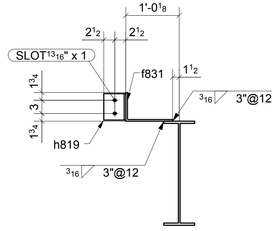

SECTION - C

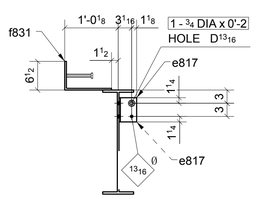

SECTION - D

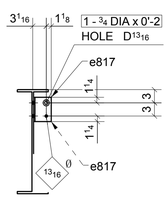

SECTION - E

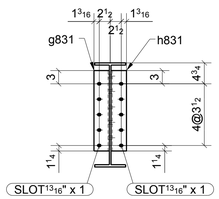

SECTION - F

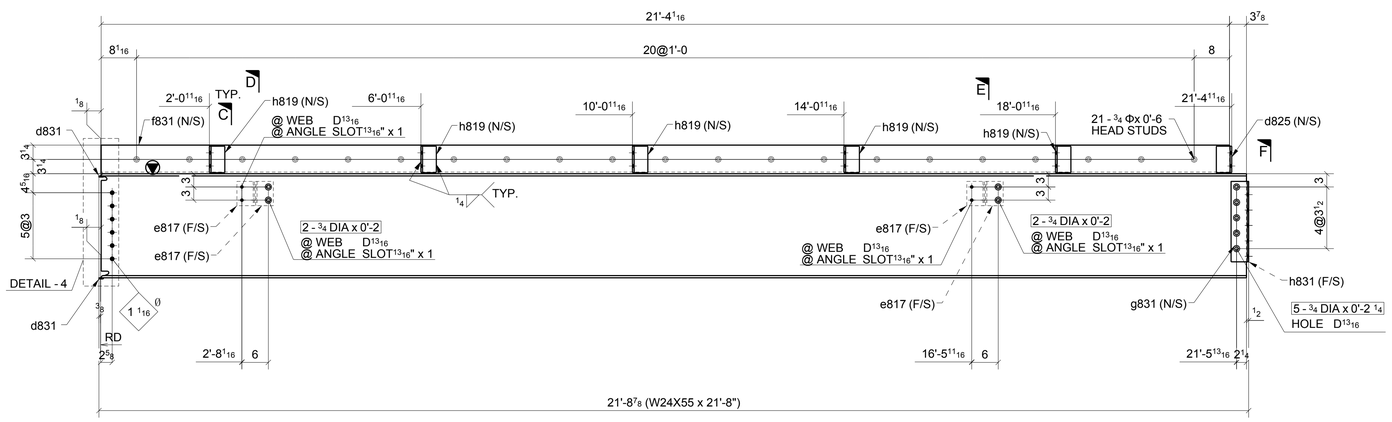

ONE - BEAM ~ 831B

LOCATION: ONE @ 7.1-8/A.6 (REF: E8A)

SHOP BOLT IN SLOTTED HOLE
NEED "HAND TIGHTEN"

MATERIAL LIST

QTY	MARK	DESCRIPTION	LENGTH	MATERIAL	NOTES
1	831A	W24X55	1'-10 11/16"	A992	
1	b831	BPL3/8"X17 1/8"	1'-10 9/16"	A36	
1	c831	BPL3/8"X14 3/8"	1'-3 5/8"	A36	
2	d817	L4X4X5/16	0'-8 1/2"	A36	
2	d831	PL1/4"X1"	0'-9"	A36	
2	h819	L5X3-1/2X3/8	0'-6"	A36	
1		3/4" DIA. W/N&W	0'-2"	A325N_TC	
3		3/4" DIA. W/N&W	0'-2"	A325N_TC	
2		3/4" STUD	0'-6"		
1		3/4" STUD	0'-6"		
1	831B	W24X55	21'-8"	A992	
1	d825	L5X3-1/2X3/8	0'-6"	A36	
2	d831	PL1/4"X1"	0'-9"	A36	
4	e817	L4X4X5/16	0'-5 1/2"	A36	
1	f831	BPL3/8"X17 1/8"	21'-4 1/16"	A36	
1	g831	L4X3-1/2X5/16	1'-6 1/4"	A36	
5	h819	L5X3-1/2X3/8	0'-6"	A36	
1	h831	L4X3-1/2X5/16	1'-6 1/4"	A36	
5		3/4" DIA. W/N&W	0'-2 1/4"	A325N_TC	
2		3/4" DIA. W/N&W	0'-2"	A325N_TC	
4		3/4" DIA. W/N&W	0'-2"	A325N_TC	
21		3/4" STUD	0'-6"		

Romac By: Checked By:

Beamline By: Checked By:

ATLAS IRON WORKS
ST. LOUIS, MO.

A	FOR APPROVAL		07/08/16
Sequence:	8	Ref. E-Plans:	–
Material:	A992 U.N.O.	Edge Dist.:	1 1/2" U.N.O.
Holes:	13/16"DIA.	Bolts:	NOTED
Cleaning:	NONE		
Paint:	NO		
DFT:		COLOR:	

Project: WEBSTER UNIVERSITY INTERDISCIPLINARY SCIENCE BUILDING
Customer: PARIC CORPORATION
Owner: WEBSTER UNIVERSITY
Location: WEBSTER GUOVES,MO 63119
Dwn: ZZ Date: 07/06/2016 Ckd: LJ Date: 07/07/2016
Job No. A16013 BAT: DWG#: 831

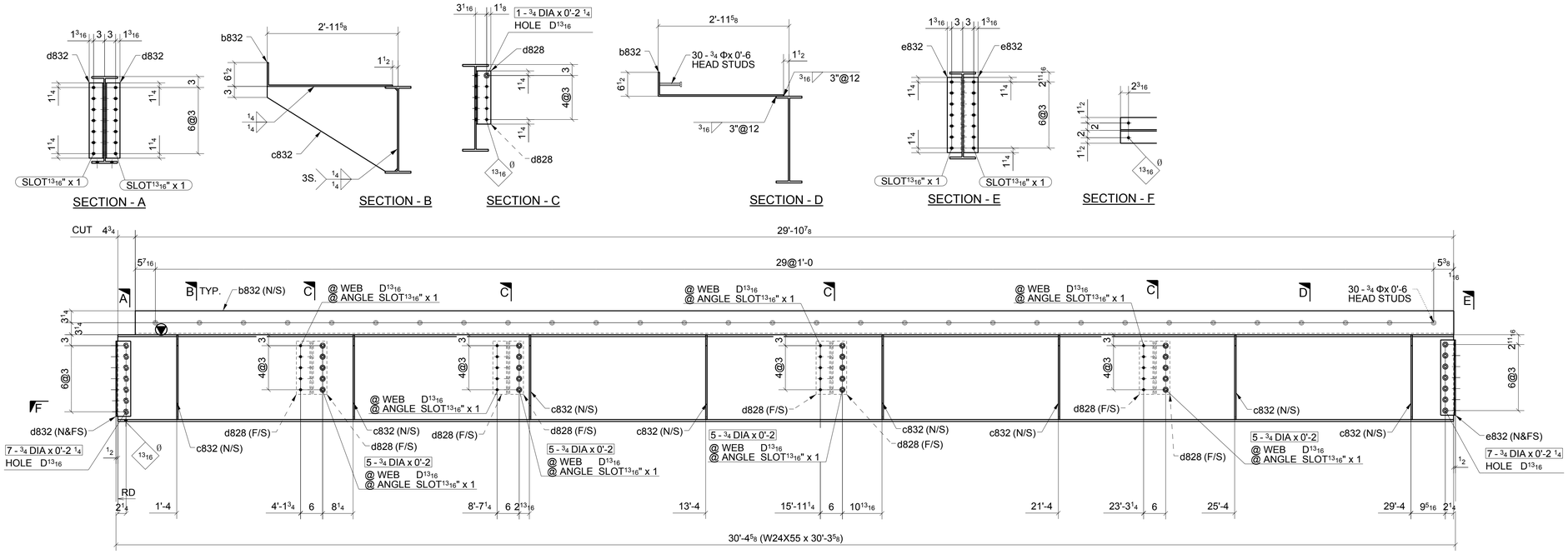

ONE - BEAM ~ 832A

LOCATION: ONE @ 8/B-C (REF: E8A)

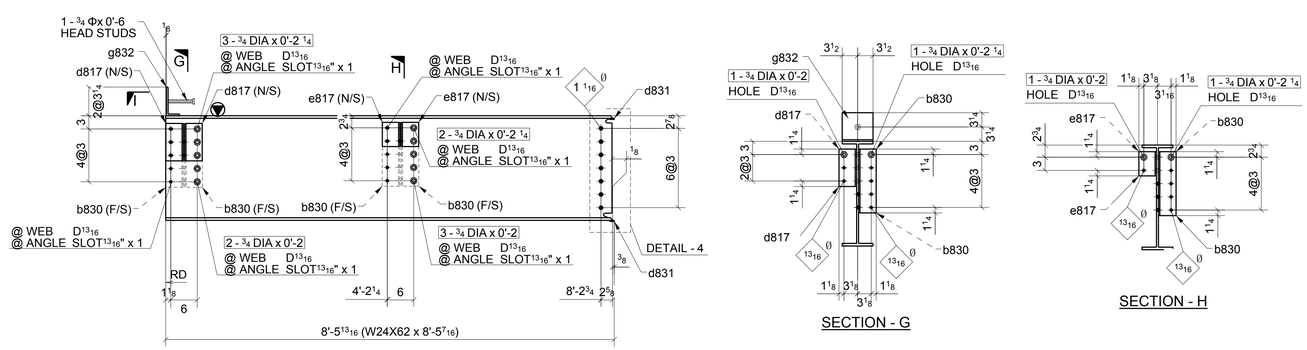

ONE - BEAM ~ 832B

LOCATION: ONE @ 6/B-B.3 (REF: E8A)

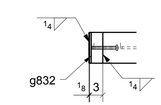

SHOP BOLT IN SLOTTED HOLE
NEED "HAND TIGHTEN"

MATERIAL LIST

QTY	MARK	DESCRIPTION	LENGTH	MATERIAL	NOTES
1	832A	W24X55	30'-3 5/8"	A992	
1	b832	BPL3/8"X40 5/8"	29'-10 15/1	A36	
8	c832	PL3/8"X23 1/8"	2'-11 7/16"	A36	
8	d828	L4X4X5/16	1'-2 1/2"	A36	
2	d832	L4X4X5/16	1'-8 1/2"	A36	
2	e832	L4X4X5/16	1'-8 1/2"	A36	
4		3/4" DIA. W/N&W	0'-2 1/4"	A325N_TC	
14		3/4" DIA. W/N&W	0'-2 1/4"	A325N_TC	
20		3/4" DIA. W/N&W	0'-2"	A325N_TC	
30		3/4" STUD	0'-6"		
1	832B	W24X62	8'-5 7/16"	A992	
4	b830	L4X4X5/16	1'-2 1/2"	A36	
2	d817	L4X4X5/16	0'-8 1/2"	A36	
2	d831	PL1/4"X1"	0'-9"	A36	
2	e817	L4X4X5/16	0'-5 1/2"	A36	
1	g832	BPL3/8"X7"	0'-9 1/2"	A36	
3		3/4" DIA. W/N&W	0'-2"	A325N_TC	
3		3/4" DIA. W/N&W	0'-2 1/4"	A325N_TC	
2		3/4" DIA. W/N&W	0'-2 1/4"	A325N_TC	
2		3/4" DIA. W/N&W	0'-2"	A325N_TC	
2		3/4" DIA. W/N&W	0'-2"	A325N_TC	
2		3/4" DIA. W/N&W	0'-2 1/4"	A325N_TC	
1		3/4" STUD	0'-6"		

Romac By: _____ Checked By: _____

Beamline By: _____ Checked By: _____

ATLAS IRON WORKS
ST. LOUIS, MO.

A	FOR APPROVAL		07/08/16
Sequence:	8	Ref. E-Plans:	–
Material:	A992 U.N.O.	Edge Dist.:	1 1/2" U.N.O.
Holes:	13/16"DIA.	Bolts:	NOTED
Cleaning:	NONE		
Paint:	NO		
DFT:		COLOR:	

Project: WEBSTER UNIVERSITY INTERDISCIPLINARY SCIENCE BUILDING

Customer: PARIC CORPORATION

Owner: WEBSTER UNIVERSITY

Location: WEBSTER GUOVES,MO 63119

Dwn: ZZ Date: 07/06/2016 Ckd: LJ Date: 07/07/2016

Job No. A16013 BAT: DWG#: 832

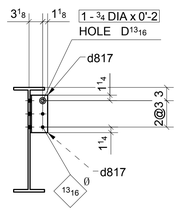

SECTION - A

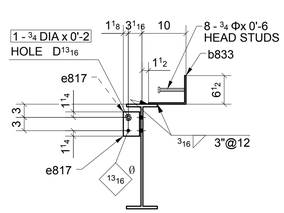

SECTION - B

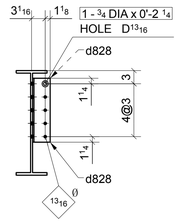

SECTION - C

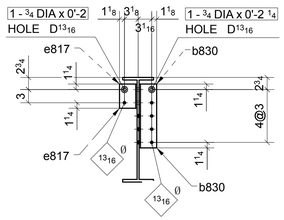

SECTION - D

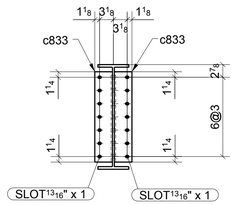

SECTION - E

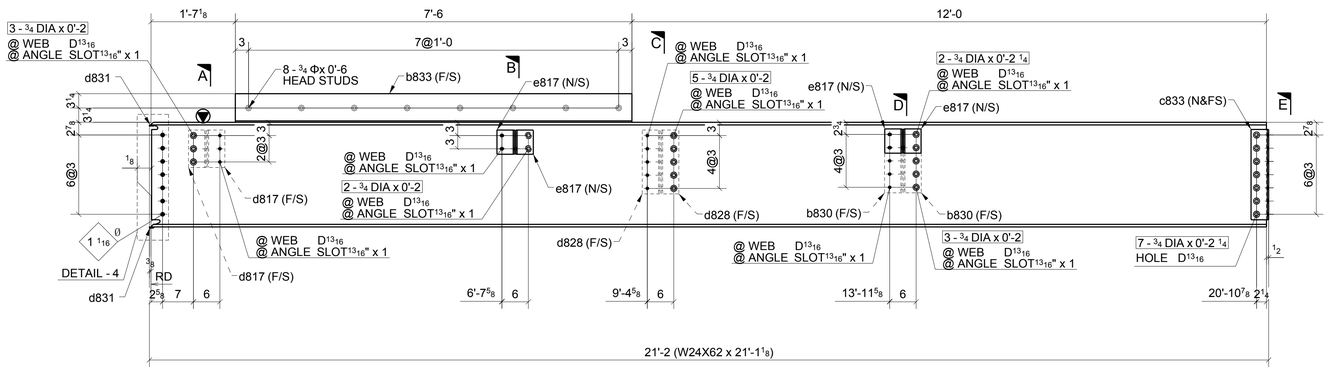

ONE - BEAM ~ 833A

LOCATION: (REF: E8A)
ONE @ 6/B.3-C

SHOP BOLT IN SLOTTED HOLE
NEED "HAND TIGHTEN"

MATERIAL LIST

QTY	MARK	DESCRIPTION	LENGTH	MATERIAL	NOTES
1	833A	W24X62	21'-1 1/8"	A992	
2	b830	L4X4X5/16	1'-2 1/2"	A36	
1	b833	BPL5/16"*15"	7'-6"	A36	
2	c833	L4X4X5/16	1'-8 1/2"	A36	
2	d817	L4X4X5/16	0'-8 1/2"	A36	
2	d828	L4X4X5/16	1'-2 1/2"	A36	
2	d831	PL1/4"X1"	0'-9"	A36	
4	e817	L4X4X5/16	0'-5 1/2"	A36	
2		3/4" DIA. W/N&W	0'-2"	A325N_TC	
5		3/4" DIA. W/N&W	0'-2"	A325N_TC	
2		3/4" DIA. W/N&W	0'-2 1/4"	A325N_TC	
7		3/4" DIA. W/N&W	0'-2 1/4"	A325N_TC	
2		3/4" DIA. W/N&W	0'-2 1/4"	A325N_TC	
3		3/4" DIA. W/N&W	0'-2"	A325N_TC	
6		3/4" DIA. W/N&W	0'-2"	A325N_TC	
8		3/4" STUD	0'-6"		

Romac By: Checked By:
Beamline By: Checked By:

A	FOR APPROVAL		07/08/16
Sequence:	8	Ref. E-Plans:	--
Material:	A992 U.N.O.	Edge Dist.:	1 1/2" U.N.O.
Holes:	13/16"DIA.	Bolts:	NOTED
Cleaning:	NONE		
Paint:	NO		
DFT:		COLOR:	

ATLAS IRON WORKS
ST. LOUIS, MO.

Project: WEBSTER UNIVERSITY INTERDISCIPLINARY SCIENCE BUILDING
Customer: PARIC CORPORATION
Owner: WEBSTER UNIVERSITY
Location: WEBSTER GUOVES,MO 63119
Dwn: ZZ Date: 07/06/2016 Ckd: LJ Date: 07/07/2016
Job No. A16013 BAT: DWG#: 833

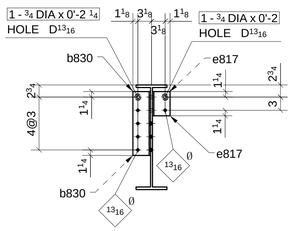

SECTION - A

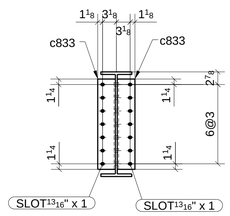

SECTION - B

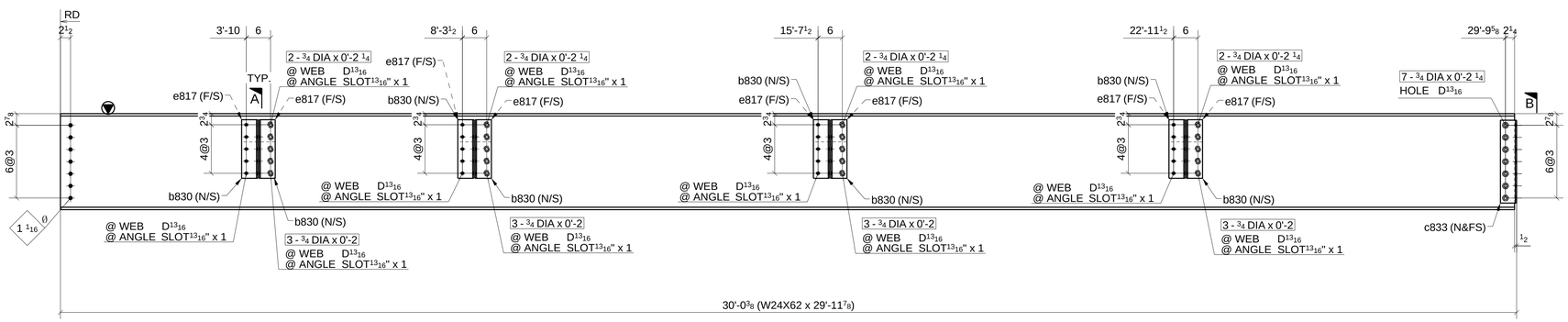

ONE - BEAM ~ 834A

LOCATION: (REF: E8A)
ONE @ 7/B-C

SHOP BOLT IN SLOTTED HOLE
NEED "HAND TIGHTEN"

MATERIAL LIST

QTY	MARK	DESCRIPTION	LENGTH	MATERIAL	NOTES
1	834A	W24X62	29'-11 7/8"	A992	
8	b830	L4X4X5/16	1'-2 1/2"	A36	
2	c833	L4X4X5/16	1'-8 1/2"	A36	
8	e817	L4X4X5/16	0'-5 1/2"	A36	
7		3/4" DIA. W/N&W	0'-2 1/4"	A325N_TC	
4		3/4" DIA. W/N&W	0'-2"	A325N_TC	
4		3/4" DIA. W/N&W	0'-2 1/4"	A325N_TC	
8		3/4" DIA. W/N&W	0'-2 1/4"	A325N_TC	
12		3/4" DIA. W/N&W	0'-2"	A325N_TC	

Romac By: Checked By:
Beamline By: Checked By:

A FOR APPROVAL 07/08/16

Sequence: 8 Ref. E-Plans: –
Material: A992 U.N.O. Edge Dist.: 1 1/2" U.N.O.
Holes: 13/16"DIA. Bolts: NOTED
Cleaning: NONE
Paint: NO
DFT: COLOR:

ATLAS IRON WORKS
ST. LOUIS, MO.

Project: WEBSTER UNIVERSITY INTERDISCIPLINARY SCIENCE BUILDING
Customer: PARIC CORPORATION
Owner: WEBSTER UNIVERSITY
Location: WEBSTER GUOVES,MO 63119
Dwn: ZZ Date: 07/06/2016 Ckd: LJ Date: 07/06/2016
Job No. A16013 BAT: DWG#: 834

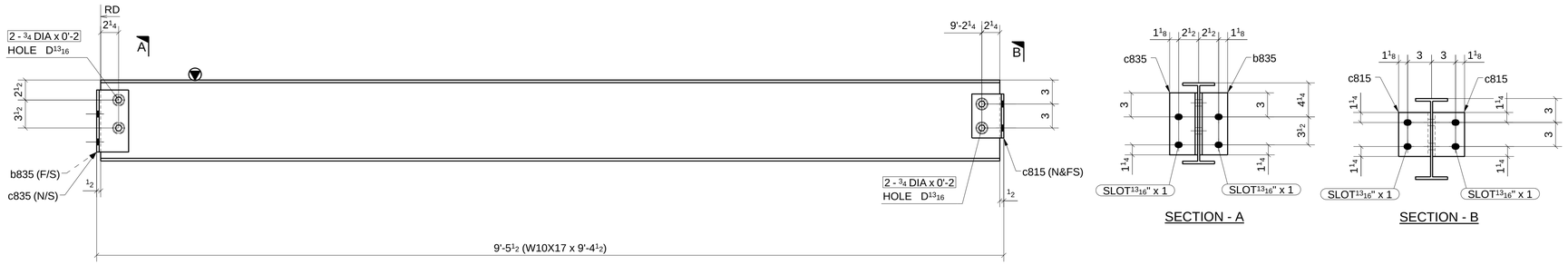

ONE - BEAM ~ 835A

LOCATION: (REF: E8A)
ONE @ 6-7/C

SHOP BOLT IN SLOTTED HOLE
NEED "HAND TIGHTEN"

FOR APPROVAL

MATERIAL LIST

QTY	MARK	DESCRIPTION	LENGTH	MATERIAL	NOTES
1	835A	W10X17	9'-4 1/2"	A992	
1	b835	L4X3-1/2X5/16	0'-7 3/4"	A36	
2	c815	L4X4X5/16	0'-5 1/2"	A36	
1	c835	L4X3-1/2X5/16	0'-7 3/4"	A36	
4		3/4" DIA. W/N&W	0'-2"	A325N_TC	

Romac By: Checked By:
Beamline By: Checked By:

A	FOR APPROVAL	07/08/16

Sequence: 8 Ref. E-Plans: –
Material: A992 U.N.O. Edge Dist.: 1 1/2" U.N.O.
Holes: 13/16"DIA. Bolts: NOTED
Cleaning: NONE
Paint: NO
DFT: COLOR:

ATLAS IRON WORKS
ST. LOUIS, MO.

Project: WEBSTER UNIVERSITY INTERDISCIPLINARY SCIENCE BUILDING
Customer: PARIC CORPORATION
Owner: WEBSTER UNIVERSITY
Location: WEBSTER GUOVES,MO 63119
Dwn: ZZ Date: 07/06/2016 Ckd: LJ Date: 07/06/2016
Job No. A16013 BAT: DWG#: 835

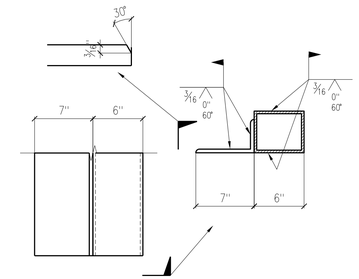

DETAIL "5"

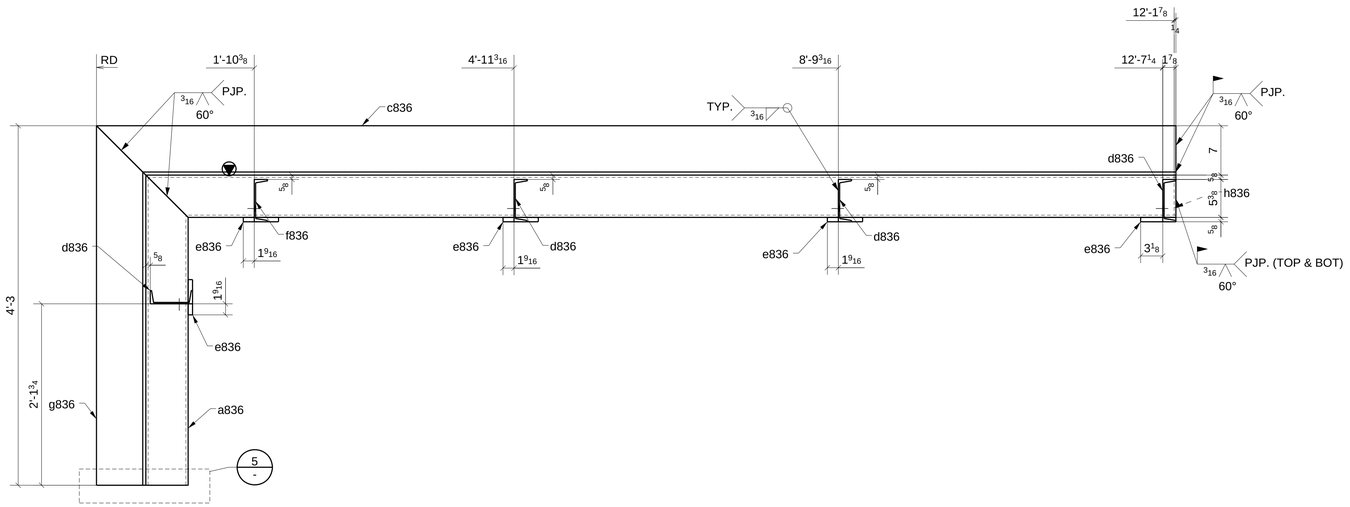

SECTION - A

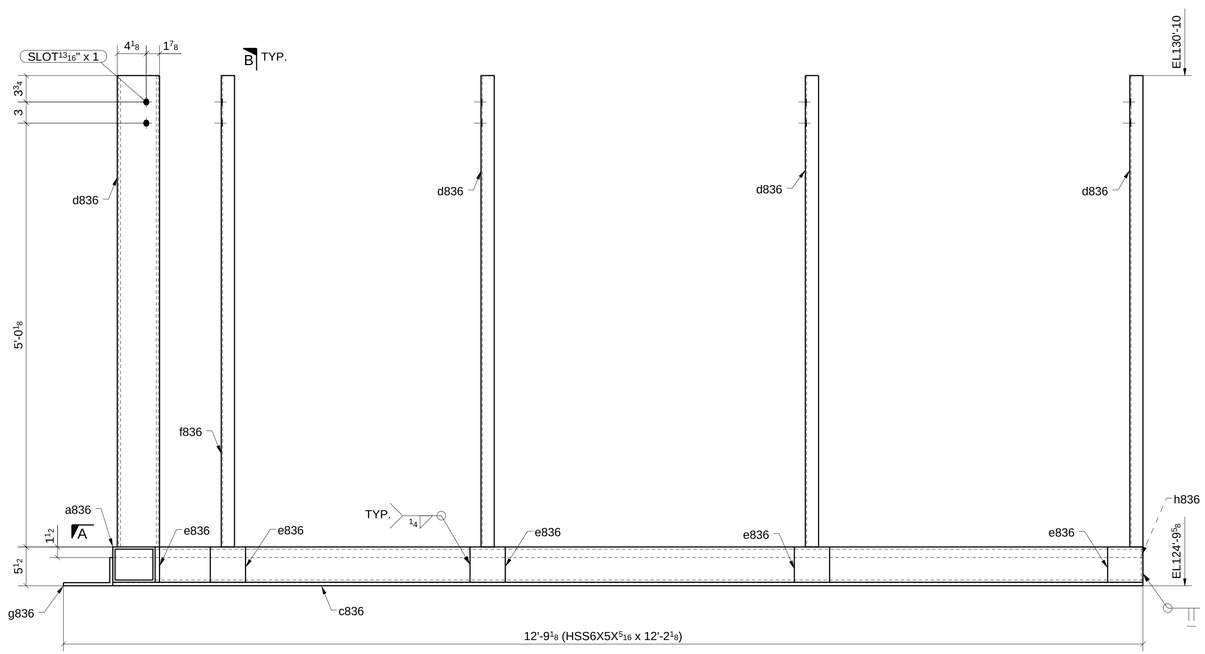

ONE - BEAM ~ 836A

LOCATION: (REF: E8A)

ONE @ 7-7.1/A.6-B

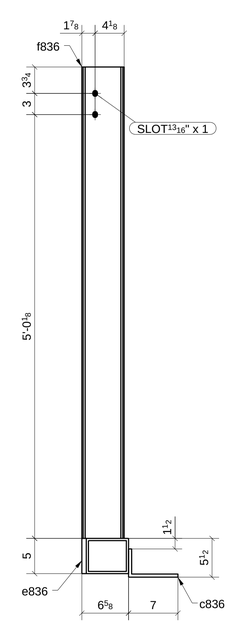

SECTION - B

SHOP BOLT IN SLOTTED HOLE
NEED "HAND TIGHTEN"

MATERIAL LIST

QTY	MARK	DESCRIPTION	LENGTH	MATERIAL	NOTES
1	836A	HSS6X5X5/16	12'-2 1/8"	A500-GR.B-46	
1	a836	HSS6X5X5/16	3'-8"	A500-GR.B-46	
1	c836	L7X4X7/16	12'-9 1/8"	A36	GALV.
4	d836	C6X8.2	5'-6 7/8"	A992	
5	e836	PL5/8"X5"	0'-5"	A36	
1	f836	C6X8.2	5'-6 7/8"	A992	
1	g836	L7X4X7/16	4'-3"	A36	GALV.
1	h836	PL1/4"X4 3/8"	0'-5 3/8"	A36	

Romac By: Checked By:

Beamline By: Checked By:

ATLAS IRON WORKS
ST. LOUIS, MO.

A	FOR APPROVAL		07/08/16
Sequence:	8	Ref. E-Plans:	–
Material:	A992 U.N.O.	Edge Dist.:	1 1/2" U.N.O.
Holes:	13/16"DIA.	Bolts:	NOTED
Cleaning:	NONE		
Paint:	NO		
DFT:		COLOR:	

Project: WEBSTER UNIVERSITY INTERDISCIPLINARY SCIENCE BUILDING

Customer: PARIC CORPORATION

Owner: WEBSTER UNIVERSITY

Location: WEBSTER GUOVES,MO 63119

Dwn: ZZ Date: 07/06/2016 Ckd: LJ Date: 07/07/2016

Job No. A16013 BAT: DWG#: 836

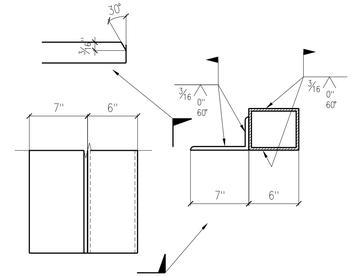

DETAIL "5"

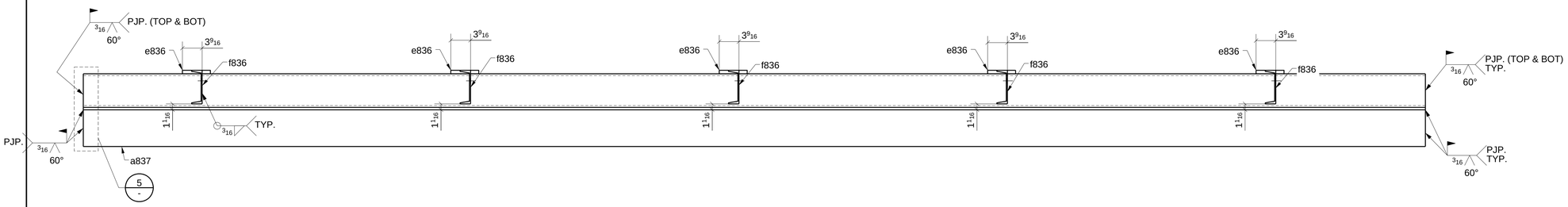

SECTION - A

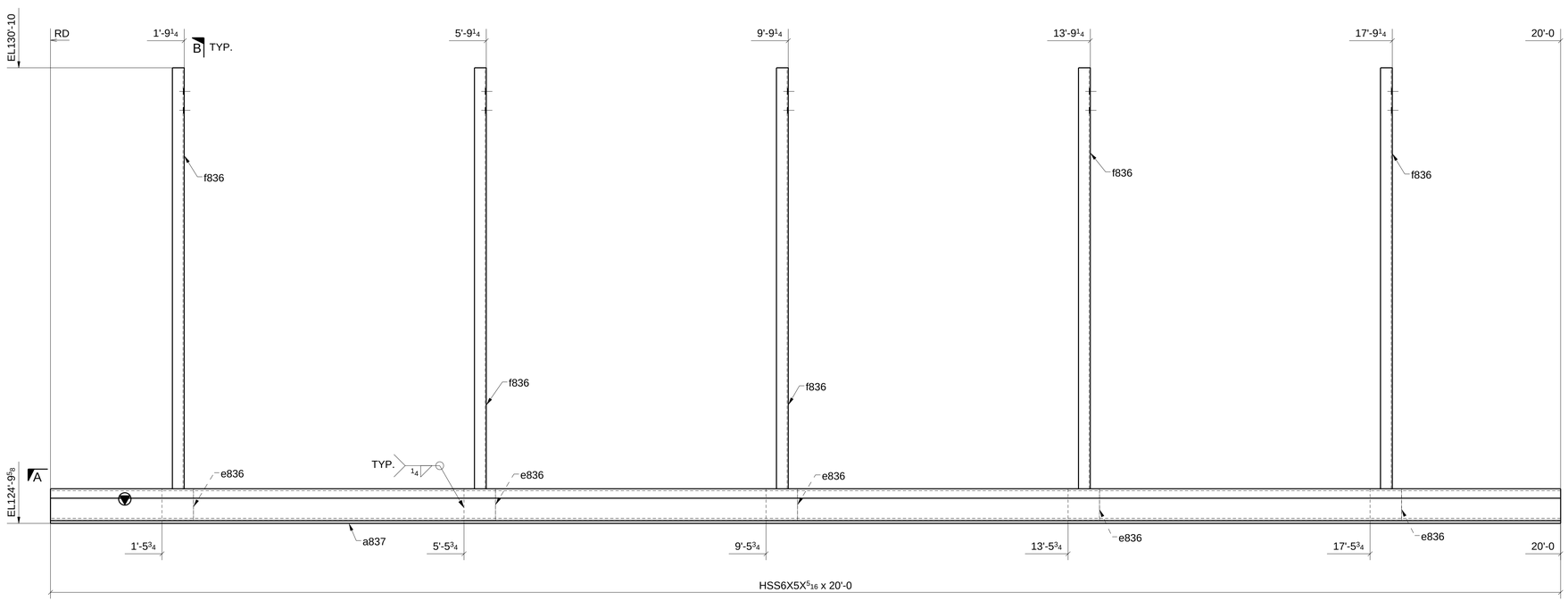

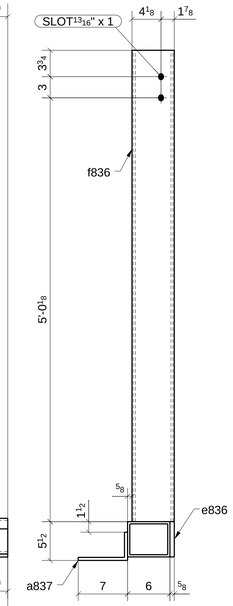

SECTION - B

ONE - BEAM ~ 837A

LOCATION: (REF: E8A)
ONE @ 7.1-8/A.6

SHOP BOLT IN SLOTTED HOLE
NEED "HAND TIGHTEN"

MATERIAL LIST

QTY	MARK	DESCRIPTION	LENGTH	MATERIAL	NOTES
1	837A	HSS6X5X5/16	20'-0"	A500-GR.B-46	
1	a837	L7X4X7/16	20'-0"	A36	GALV.
5	e836	PL5/8"X5"	0'-5"	A36	
5	f836	C6X8.2	5'-6 7/8"	A992	

A	FOR APPROVAL		07/08/16
Sequence:	8	Ref. E-Plans:	–
Material:	A992 U.N.O.	Edge Dist.:	1 1/2" U.N.O.
Holes:	13/16"DIA.	Bolts:	NOTED
Cleaning:	NONE		
Paint:	NO		
DFT:		COLOR:	

Romac By: Checked By:
Beamline By: Checked By:

ATLAS IRON WORKS
ST. LOUIS, MO.

Project:	WEBSTER UNIVERSITY INTERDISCIPLINARY SCIENCE BUILDING
Customer:	PARIC CORPORATION
Owner:	WEBSTER UNIVERSITY
Location:	WEBSTER GUOVES,MO 63119
Dwn: ZZ	Date: 07/06/2016 Ckd: LJ Date: 07/08/2016
Job No.	A16013 BAT: DWG#: 837

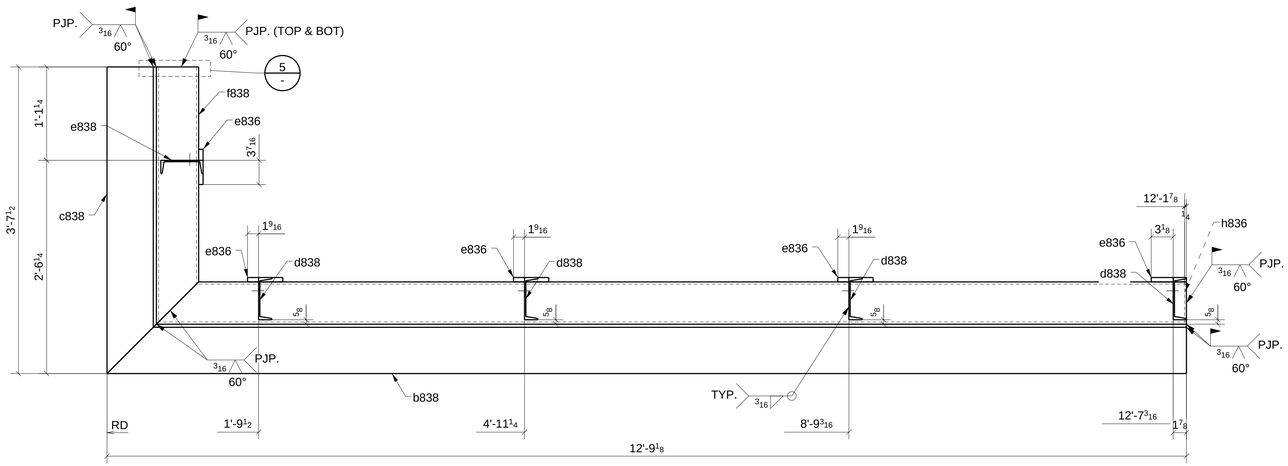

SECTION - A

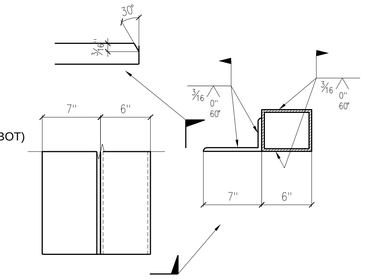

DETAIL "5"

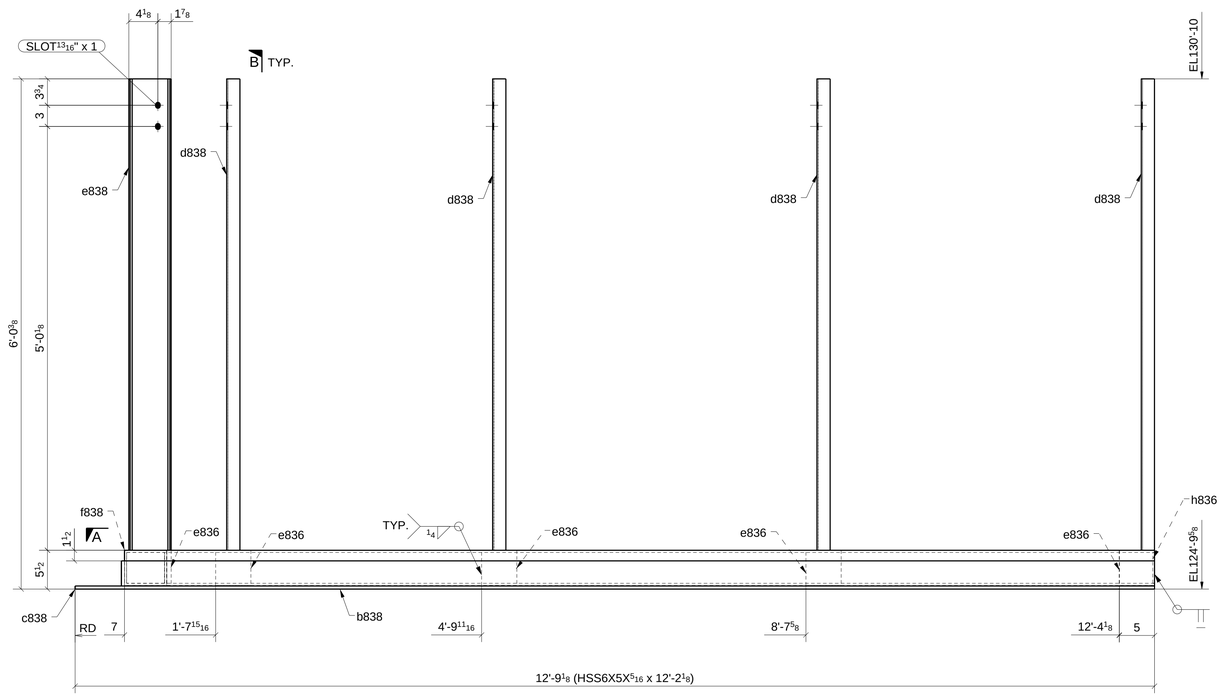

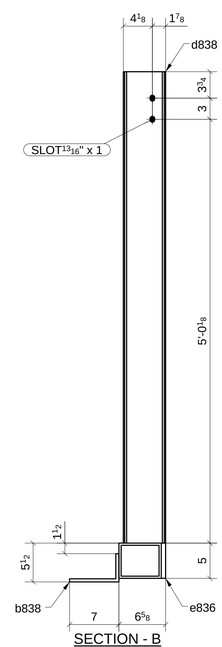

SECTION - B

ONE - BEAM ~ 838A

LOCATION: (REF: E8A)
ONE @ 8/A.6-B

SHOP BOLT IN SLOTTED HOLE
NEED "HAND TIGHTEN"

MATERIAL LIST

QTY	MARK	DESCRIPTION	LENGTH	MATERIAL	NOTES
1	838A	HSS6X5X5/16	12'-2 1/8"	A500-GR.B-46	
1	b838	L7X4X7/16	12'-9 1/8"	A36	GALV.
1	c838	L7X4X7/16	3'-7 1/2"	A36	GALV.
4	d838	C6X8.2	5'-6 7/8"	A992	
5	e836	PL5/8"X5"	0'-5"	A36	
1	e838	C6X8.2	5'-6 7/8"	A992	
1	f838	HSS6X5X5/16	3'-0 1/2"	A500-GR.B-46	
1	h836	PL1/4"X4 3/8"	0'-5 3/8"	A36	

Romac By: Checked By:
Beamline By: Checked By:

ATLAS IRON WORKS
ST. LOUIS, MO.

A	FOR APPROVAL 07/08/16
Sequence:	8
Ref. E-Plans:	–
Material:	A992 U.N.O.
Edge Dist.:	1 1/2" U.N.O.
Holes:	13/16"DIA.
Bolts:	NOTED
Cleaning:	NONE
Paint:	NO
DFT:	
COLOR:	
Project:	WEBSTER UNIVERSITY INTERDISCIPLINARY SCIENCE BUILDING
Customer:	PARIC CORPORATION
Owner:	WEBSTER UNIVERSITY
Location:	WEBSTER GUOVES,MO 63119
Dwn: ZZ	Date: 07/06/2016 Ckd: LJ Date: 07/08/2016
Job No.	A16013 BAT: DWG#: 838

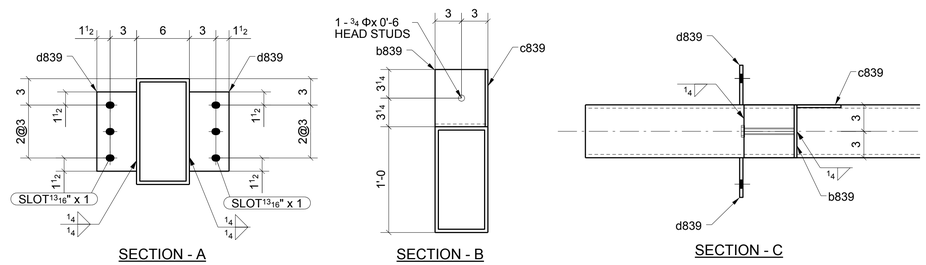

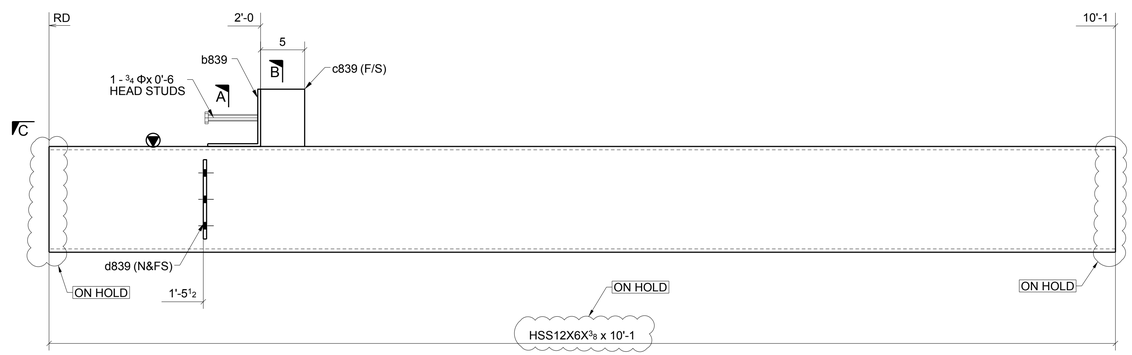

ONE - BEAM ~ 839A

LOCATION: (REF: E8A)
ONE @ 5-6/B.3-C

ON HOLD

SHOP BOLT IN SLOTTED HOLE
NEED "HAND TIGHTEN"

MATERIAL LIST

QTY	MARK	DESCRIPTION	LENGTH	MATERIAL	NOTES
1	839A	HSS12X6X3/8	10'-1"	A500-GR.B-46	
1	b839	BPL5/16"*12"1/2	0'-6"	A36	
1	c839	PL5/16"X5"	0'-6 1/2"	A36	
2	d839	PL3/8"X4 1/2"	0'-9"	A36	
1		3/4" STUD	0'-6"		

Romac By: Checked By:
Beamline By: Checked By:

A	FOR APPROVAL	07/08/16

Sequence: 8 Ref. E-Plans: --
Material: A992 U.N.O. Edge Dist.: 1 1/2" U.N.O.
Holes: 13/16"DIA. Bolts: NOTED
Cleaning: NONE
Paint: NO
DFT: COLOR:

ATLAS IRON WORKS
ST. LOUIS, MO.

Project: WEBSTER UNIVERSITY INTERDISCIPLINARY SCIENCE BUILDING
Customer: PARIC CORPORATION
Owner: WEBSTER UNIVERSITY
Location: WEBSTER GUOVES,MO 63119
Dwn: ZZ Date: 07/06/2016 Ckd: LJ Date: 07/07/2016
Job No. A16013 BAT: DWG#: 839

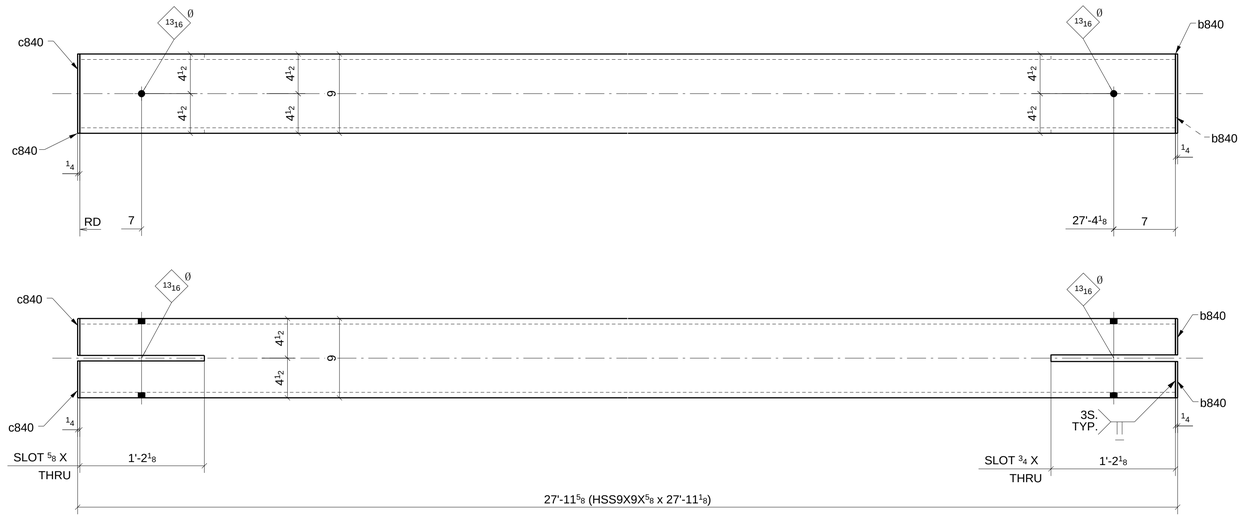

ONE - VERTICAL BRACE ~ 840A

(REF: E8D)

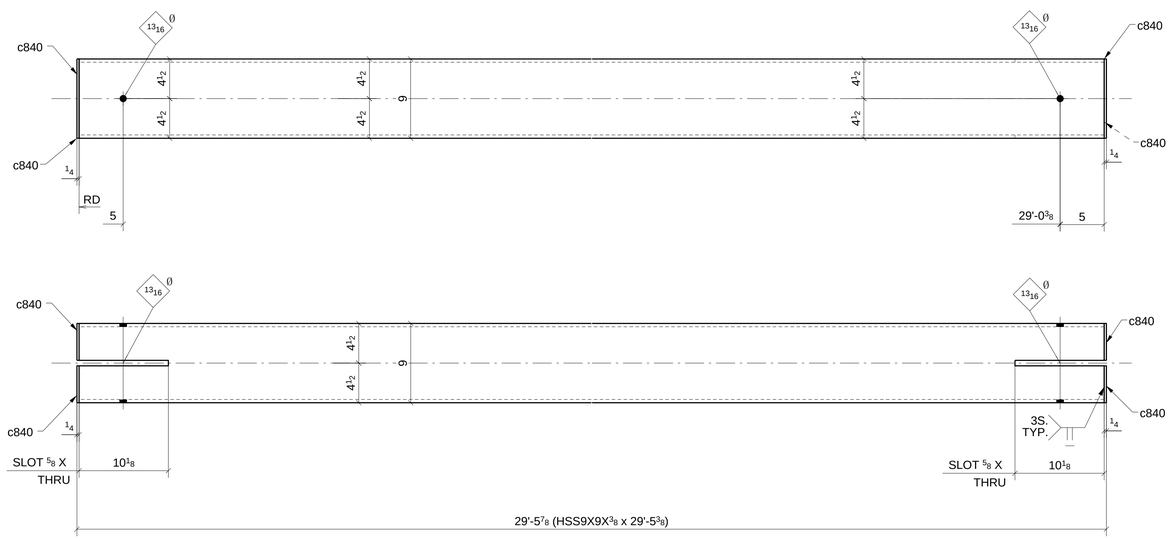

ONE - VERTICAL BRACE ~ 840B

(REF: E8D)

FOR APPROVAL

MATERIAL LIST

QTY	MARK	DESCRIPTION	LENGTH	MATERIAL	NOTES
1	840A	HSS9X9X5/8	27'-11 1/8"	A500-GR.B-46	
2	b840	PL1/4"X4 1/8"	0'-9"	A36	
2	c840	PL1/4"X4 3/16"	0'-9"	A36	
1	840B	HSS9X9X3/8	29'-5 3/8"	A500-GR.B-46	
4	c840	PL1/4"X4 3/16"	0'-9"	A36	

Romac By: _____ Checked By: _____

Beamline By: _____ Checked By: _____

A FOR APPROVAL 07/08/16

Sequence: 8 Ref. E-Plans: –

Material: A992 U.N.O. Edge Dist.: 1 1/2" U.N.O.

Holes: 13/16"DIA. Bolts: NOTED

Cleaning: NONE

Paint: NO

DFT: _____ COLOR: _____

ATLAS IRON WORKS

ST. LOUIS, MO.

Project: WEBSTER UNIVERSITY INTERDISCIPLINARY SCIENCE BUILDING

Customer: PARIC CORPORATION

Owner: WEBSTER UNIVERSITY

Location: WEBSTER GUOVES,MO 63119

Dwn: ZZ Date: 07/06/2016 Ckd: LJ Date: 07/07/2016

Job No. A16013 BAT: _____ DWG#: 840

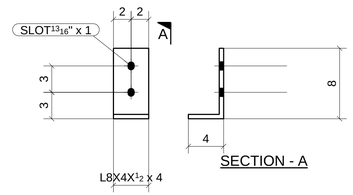

8 - ANGLES ~ 841A

(REF: E8A)

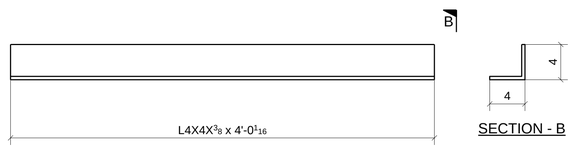

4 - ANGLES ~ 841B

(REF: E8A)

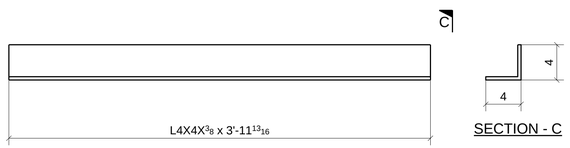

ONE - ANGLE ~ 841C

(REF: E8A)

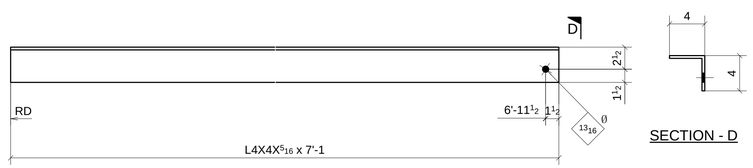

3 - ANGLES ~ 841D

(REF: E8A)

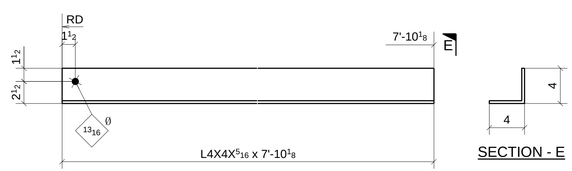

5 - ANGLES ~ 841F

(REF: E8A)

MATERIAL LIST

QTY	MARK	DESCRIPTION	LENGTH	MATERIAL	NOTES
8	841A	L8X4X1/2	0'-4"	A36	
4	841B	L4X4X3/8	4'-0 1/16"	A36	
1	841C	L4X4X3/8	3'-11 13/16"	A36	
3	841D	L4X4X5/16	7'-1"	A36	
5	841F	L4X4X5/16	7'-10 1/8"	A36	

Romac By: _____ Checked By: _____

Beamline By: _____ Checked By: _____

A FOR APPROVAL 07/08/16

Sequence: 8 Ref. E-Plans: --

Material: A992 U.N.O. Edge Dist.: 1 1/2" U.N.O.

Holes: 13/16"DIA. Bolts: NOTED

Cleaning: NONE

Paint: NO

DFT: _____ COLOR: _____

ATLAS IRON WORKS

ST. LOUIS, MO.

Project: WEBSTER UNIVERSITY INTERDISCIPLINARY SCIENCE BUILDING

Customer: PARIC CORPORATION

Owner: WEBSTER UNIVERSITY

Location: WEBSTER GUOVES,MO 63119

Dwn: ZZ Date: 07/06/2016 Ckd: LJ Date: 07/06/2016

Job No. A16013 BAT: _____ DWG#: 841

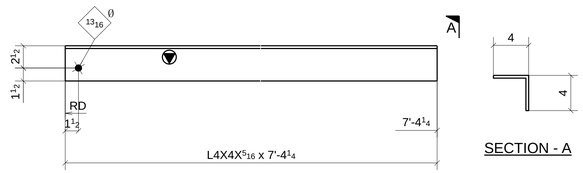

3 - ANGLES ~ 842A

(REF: E8A)

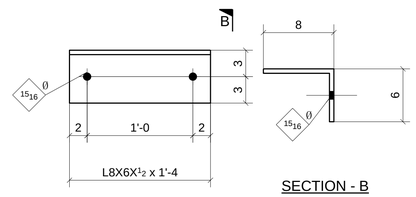

2 - ANGLES ~ 842B

(REF: E8A)

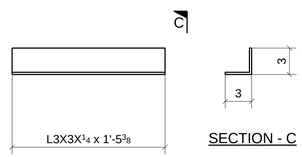

ONE - ANGLE ~ 842C

(REF: E8A)

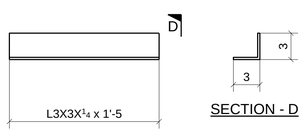

ONE - ANGLE ~ 842D

(REF: E8A)

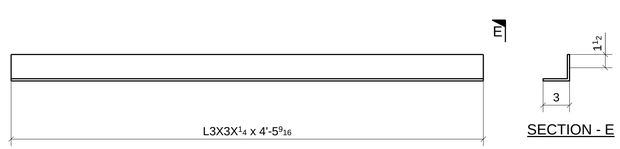

ONE - ANGLE ~ 842F

(REF: E8A)

MATERIAL LIST

QTY	MARK	DESCRIPTION	LENGTH	MATERIAL	NOTES
3	842A	L4X4X5/16	7'-4 1/4"	A36	
2	842B	L8X6X1/2	1'-4"	A36	
1	842C	L3X3X1/4	1'-5 3/8"	A36	
1	842D	L3X3X1/4	1'-5"	A36	
1	842F	L3X3X1/4	4'-5 9/16"	A36	

Romac By: _____ Checked By: _____

Beamline By: _____ Checked By: _____

A	FOR APPROVAL		07/08/16
Sequence:	8	Ref. E-Plans:	--
Material:	A992 U.N.O.	Edge Dist.:	1 1/2" U.N.O.
Holes:	13/16"DIA.	Bolts:	NOTED
Cleaning:	NONE		
Paint:	NO		
DFT:		COLOR:	

ATLAS IRON WORKS

ST. LOUIS, MO.

Project:	WEBSTER UNIVERSITY INTERDISCIPLINARY SCIENCE BUILDING				
Customer:	PARIC CORPORATION				
Owner:	WEBSTER UNIVERSITY				
Location:	WEBSTER GUOVES,MO 63119				
Dwn:	ZZ	Date: 07/06/2016	Ckd: LJ	Date:	07/06/2016
Job No.	A16013	BAT:		DWG#:	842

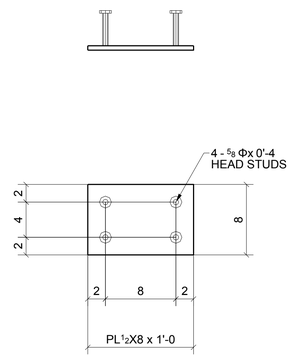

3 - EMBED PLATES ~ 843A

(REF: E8A)

MATERIAL LIST

QTY	MARK	DESCRIPTION	LENGTH	MATERIAL	NOTES
3	843A	PL1/2"X8"	1'-0"	A36	
4		5/8" STUD	0'-4"		

Romac By: _____ Checked By: _____

Beamline By: _____ Checked By: _____

ATLAS IRON WORKS
ST. LOUIS, MO.

A	FOR APPROVAL		07/08/16
Sequence:	8	Ref. E-Plans:	--
Material:	A992 U.N.O.	Edge Dist.:	1 1/2" U.N.O.
Holes:	13/16"DIA.	Bolts:	NOTED
Cleaning:	NONE		
Paint:	NO		
DFT:		COLOR:	

Project: WEBSTER UNIVERSITY INTERDISCIPLINARY SCIENCE BUILDING

Customer: PARIC CORPORATION

Owner: WEBSTER UNIVERSITY

Location: WEBSTER GUOVES,MO 63119

Dwn: ZZ Date: 07/06/2016 Ckd: LJ Date: 07/06/2016

Job No. A16013 BAT: DWG#: 843

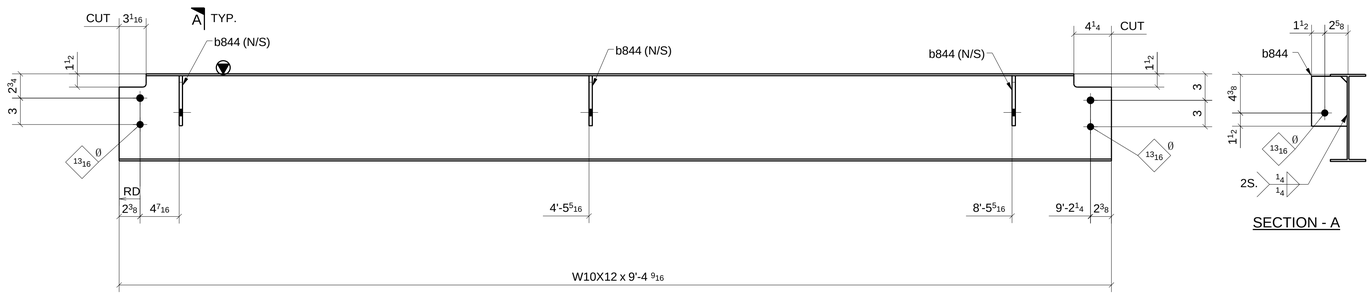

SECTION - A

ONE - BEAM ~ 844A

LOCATION: (REF: E8B)
ONE @ 6-7/B-B.3

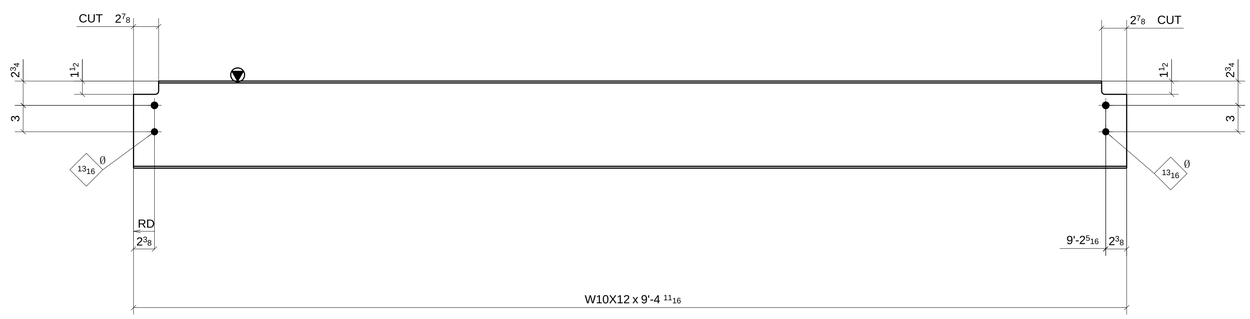

2 - BEAMS ~ 844B

LOCATION: (REF: E8B)
ONE @ 6-7/C.3-D
ONE @ 6-7/C.3-D

SHOP BOLT IN SLOTTED HOLE
NEED "HAND TIGHTEN"

MATERIAL LIST

QTY	MARK	DESCRIPTION	LENGTH	MATERIAL	NOTES
1	844A	W10X12	9'-4 5/8"	A992	
3	b844	PL3/8"X4 1/16"	0'-5 11/16"	A36	
2	844B	W10X12	9'-4 11/16"	A992	

Romac By: Checked By:
Beamline By: Checked By:

A FOR APPROVAL 07/08/16

Sequence: 8 Ref. E-Plans: –
Material: A992 U.N.O. Edge Dist.: 1 1/2" U.N.O.
Holes: 13/16"DIA. Bolts: NOTED
Cleaning: NONE
Paint: NO
DFT: COLOR:

ATLAS IRON WORKS
ST. LOUIS, MO.

Project: WEBSTER UNIVERSITY INTERDISCIPLINARY SCIENCE BUILDING
Customer: PARIC CORPORATION
Owner: WEBSTER UNIVERSITY
Location: WEBSTER GUOVES,MO 63119
Dwn: ZZ Date: 07/06/2016 Ckd: LJ Date: 07/08/2016
Job No. A16013 BAT: DWG#: 844

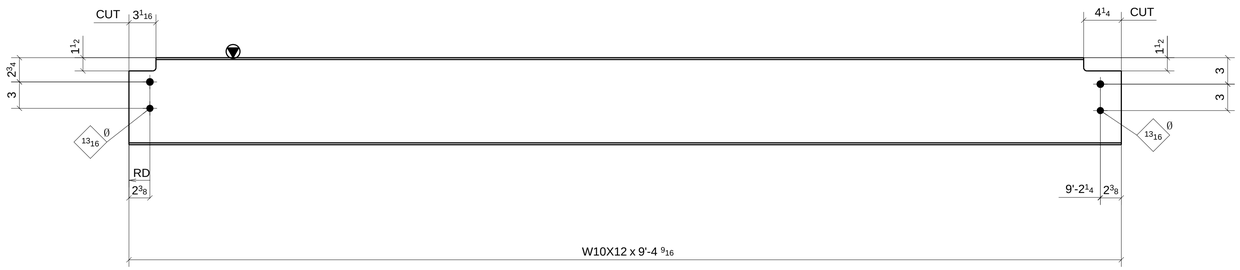

2 - BEAMS ~ 845A

LOCATION: (REF: E8B)
ONE @ 6-7/B.3-C
ONE @ 6-7/B.3-C

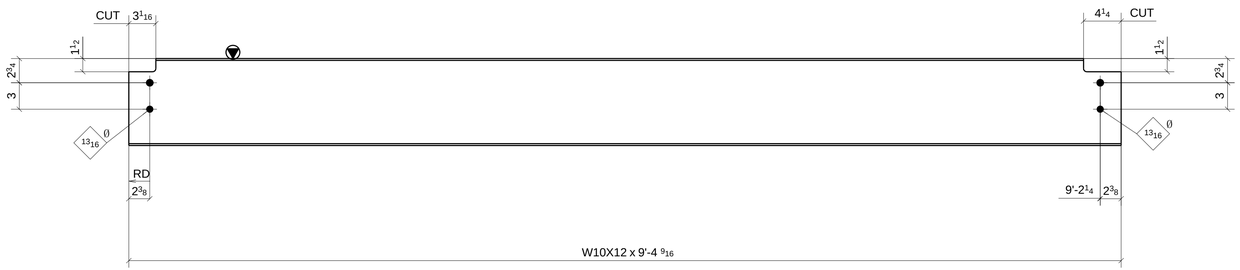

ONE - BEAM ~ 845B

LOCATION: (REF: E8B)
ONE @ 6-7/B.3-C

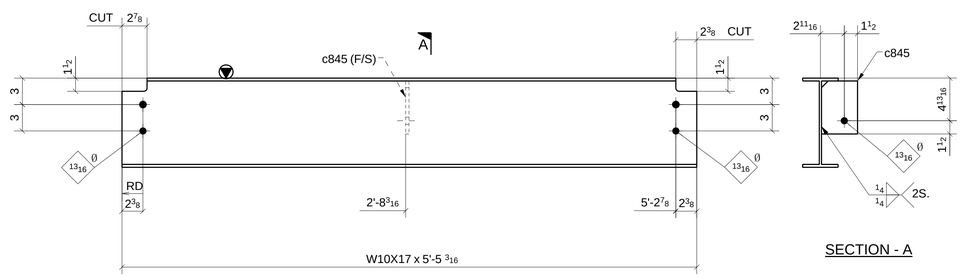

SECTION - A

ONE - BEAM ~ 845C

LOCATION: (REF: E8B)
ONE @ 7.1-8/A.6-B

SHOP BOLT IN SLOTTED HOLE
NEED "HAND TIGHTEN"

FOR APPROVAL

MATERIAL LIST

QTY	MARK	DESCRIPTION	LENGTH	MATERIAL	NOTES
2	845A	W10X12	9'-4 5/8"	A992	
1	845B	W10X12	9'-4 5/8"	A992	
1	845C	W10X17	5'-5 1/4"	A992	
1	c845	PL3/8"X4 1/16"	0'-6"	A36	

Romac By: Checked By:
Beamline By: Checked By:

ATLAS IRON WORKS
ST. LOUIS, MO.

Project:	WEBSTER UNIVERSITY INTERDISCIPLINARY SCIENCE BUILDING
Customer:	PARIC CORPORATION
Owner:	WEBSTER UNIVERSITY
Location:	WEBSTER GUOVES,MO 63119
Dwn: ZZ	Date: 07/06/2016 Ckd: LJ Date: 07/08/2016
Job No.	A16013 BAT: DWG#: 845

A FOR APPROVAL 07/08/16

Sequence:	8	Ref. E-Plans:	–
Material:	A992 U.N.O.	Edge Dist.:	1 1/2" U.N.O.
Holes:	13/16"DIA.	Bolts:	NOTED
Cleaning:	NONE		
Paint:	NO		
DFT:		COLOR:	

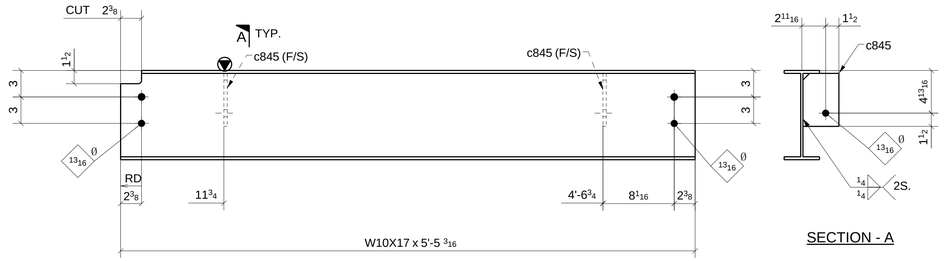

SECTION - A

ONE - BEAM ~ 846A

LOCATION: (REF: E8B)
ONE @ 7.1-8/A.6-B

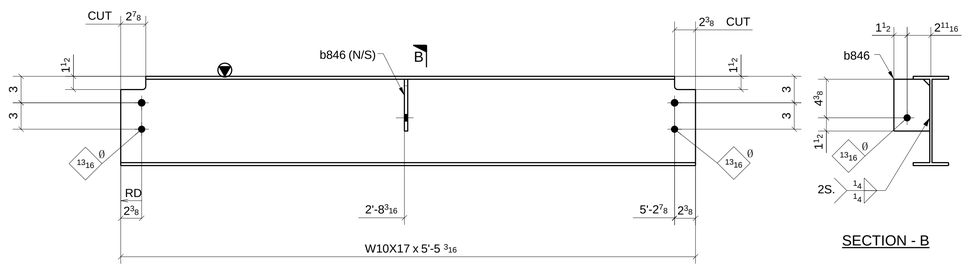

SECTION - B

ONE - BEAM ~ 846B

LOCATION: (REF: E8B)
ONE @ 7.1-8/A.6-B

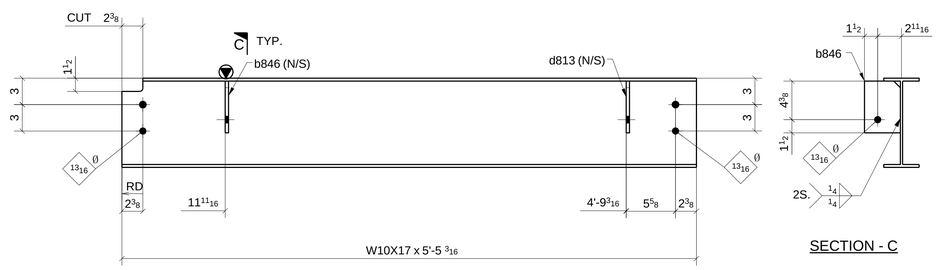

SECTION - C

ONE - BEAM ~ 846C

LOCATION: (REF: E8B)
ONE @ 7.1-8/A.6-B

SHOP BOLT IN SLOTTED HOLE
NEED "HAND TIGHTEN"

MATERIAL LIST

QTY	MARK	DESCRIPTION	LENGTH	MATERIAL	NOTES
1	846A	W10X17	5'-5 3/16"	A992	
2	c845	PL3/8"X4 1/16"	0'-6"	A36	
1	846B	W10X17	5'-5 1/4"	A992	
1	b846	PL3/8"X4 1/16"	0'-5 7/8"	A36	
1	846C	W10X17	5'-5 3/16"	A992	
1	b846	PL3/8"X4 1/16"	0'-5 7/8"	A36	
1	d813	PL3/8"X4 1/16"	0'-5 7/8"	A36	

Romac By: Checked By:
Beamline By: Checked By:

A FOR APPROVAL 07/08/16

Sequence: 8 Ref. E-Plans: --
Material: A992 U.N.O. Edge Dist.: 1 1/2" U.N.O.
Holes: 13/16"DIA. Bolts: NOTED
Cleaning: NONE
Paint: NO
DFT: COLOR:

ATLAS IRON WORKS
ST. LOUIS, MO.

Project: WEBSTER UNIVERSITY INTERDISCIPLINARY SCIENCE BUILDING
Customer: PARIC CORPORATION
Owner: WEBSTER UNIVERSITY
Location: WEBSTER GUOVES,MO 63119
Dwn: ZZ Date: 07/06/2016 Ckd: LJ Date: 07/08/2016
Job No. A16013 BAT: DWG#: 846

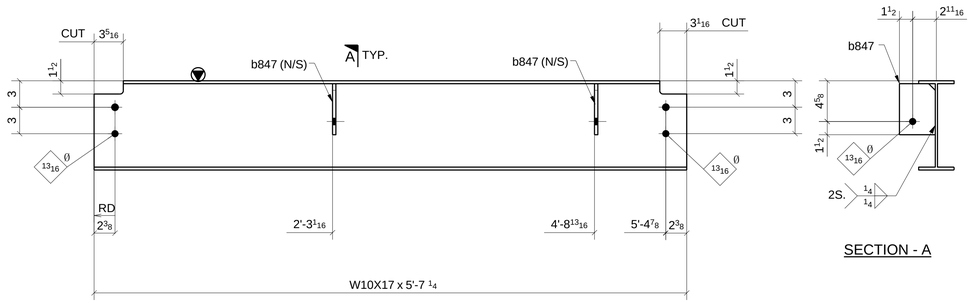

SECTION - A

ONE - BEAM ~ 847A

LOCATION: (REF: E8B)
ONE @ 7.1-8/B-B.3

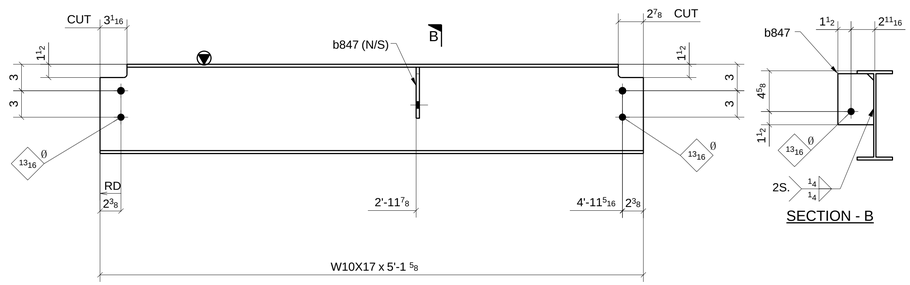

SECTION - B

ONE - BEAM ~ 847B

LOCATION: (REF: E8B)
ONE @ 7.1-8/C-C.3

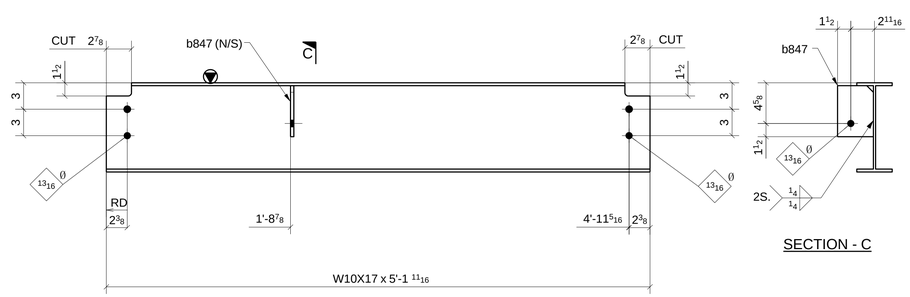

SECTION - C

ONE - BEAM ~ 847C

LOCATION: (REF: E8B)
ONE @ 7.1-8/C-D

SHOP BOLT IN SLOTTED HOLE
NEED "HAND TIGHTEN"

MATERIAL LIST

QTY	MARK	DESCRIPTION	LENGTH	MATERIAL	NOTES
1	847A	W10X17	5'-7 1/4"	A992	
2	b847	PL3/8"X4 1/16"	0'-5 13/16"	A36	
1	847B	W10X17	5'-1 11/16"	A992	
1	b847	PL3/8"X4 1/16"	0'-5 13/16"	A36	
1	847C	W10X17	5'-1 11/16"	A992	
1	b847	PL3/8"X4 1/16"	0'-5 13/16"	A36	

Romac By: Checked By:
Beamline By: Checked By:

A	FOR APPROVAL	07/08/16

Sequence: 8 Ref. E-Plans: --
Material: A992 U.N.O. Edge Dist.: 1 1/2" U.N.O.
Holes: 13/16"DIA. Bolts: NOTED
Cleaning: NONE
Paint: NO
DFT: COLOR:

ATLAS IRON WORKS
ST. LOUIS, MO.

Project: WEBSTER UNIVERSITY INTERDISCIPLINARY SCIENCE BUILDING
Customer: PARIC CORPORATION
Owner: WEBSTER UNIVERSITY
Location: WEBSTER GUOVES,MO 63119
Dwn: ZZ Date: 07/06/2016 Ckd: LJ Date: 07/08/2016
Job No. A16013 BAT: DWG#: 847

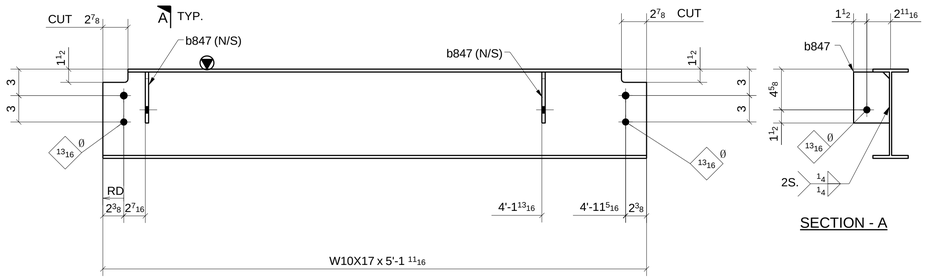

SECTION - A

ONE - BEAM ~ 848A

LOCATION: (REF: E8B)
ONE @ 7.1-8/C.3-D

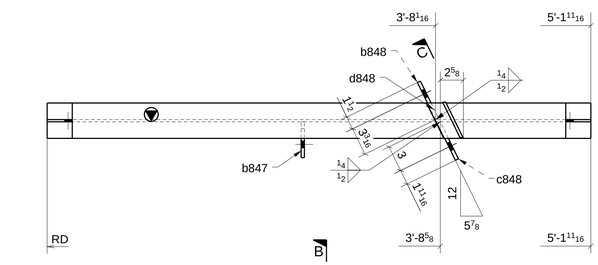

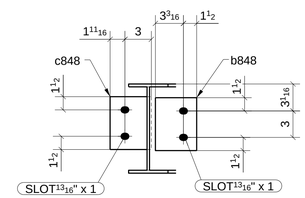

SECTION - C

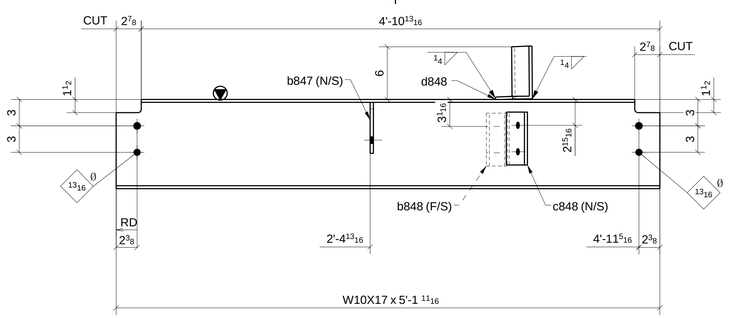

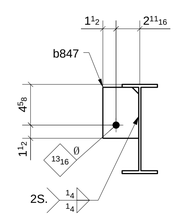

SECTION - B

ONE - BEAM ~ 848B

LOCATION: (REF: E8B)
ONE @ 7.1-8/C.3-D

SHOP BOLT IN SLOTTED HOLE
NEED "HAND TIGHTEN"

MATERIAL LIST

QTY	MARK	DESCRIPTION	LENGTH	MATERIAL	NOTES
1	848A	W10X17	5'-1 11/16"	A992	
2	b847	PL3/8"X4 1/16"	0'-5 13/16"	A36	
1	848B	W10X17	5'-1 11/16"	A992	
1	b847	PL3/8"X4 1/16"	0'-5 13/16"	A36	
1	b848	PL3/8"X4 11/16"	0'-6"	A36	
1	c848	PL3/8"X4 11/16"	0'-6"	A36	
1	d848	BPL5/16"*8"	0'-5 7/16"	A36	

Romac By: Checked By:
Beamline By: Checked By:

A FOR APPROVAL 07/08/16

Sequence: 8 Ref. E-Plans: --
Material: A992 U.N.O. Edge Dist.: 1 1/2" U.N.O.
Holes: 13/16"DIA. Bolts: NOTED
Cleaning: NONE
Paint: NO
DFT: COLOR:

ATLAS IRON WORKS
ST. LOUIS, MO.

Project: WEBSTER UNIVERSITY INTERDISCIPLINARY SCIENCE BUILDING
Customer: PARIC CORPORATION
Owner: WEBSTER UNIVERSITY
Location: WEBSTER GUOVES,MO 63119
Dwn: ZZ Date: 07/06/2016 Ckd: LJ Date: 07/08/2016
Job No. A16013 BAT: DWG#: 848

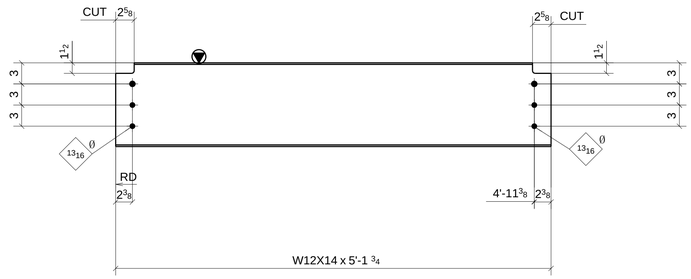

ONE - BEAM ~ 849A

LOCATION:
ONE @ 5-6/C.3-D

(REF: E8B)

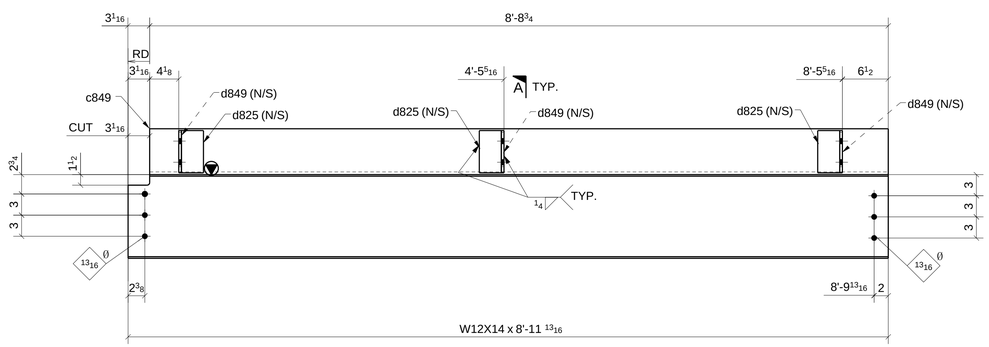

ONE - BEAM ~ 849B

LOCATION:
ONE @ 6-7/B

(REF: E8B)

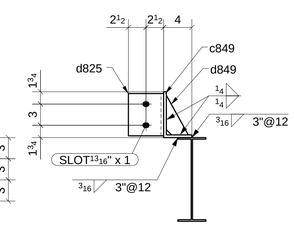

SECTION - A

SHOP BOLT IN SLOTTED HOLE
NEED "HAND TIGHTEN"

MATERIAL LIST

QTY	MARK	DESCRIPTION	LENGTH	MATERIAL	NOTES
1	849A	W12X14	5'-1 3/4"	A992	
1	849B	W12X14	8'-11 13/16"	A992	
1	c849	BPL3/8"X10 1/2"	8'-8 3/4"	A36	
3	d825	L5X3-1/2X3/8	0'-6"	A36	
3	d849	PL3/8"X3 1/8"	0'-5 5/8"	A36	

Romac By: Checked By:

Beamline By: Checked By:

ATLAS IRON WORKS
ST. LOUIS, MO.

A	FOR APPROVAL		07/08/16
Sequence:	8	Ref. E-Plans:	–
Material:	A992 U.N.O.	Edge Dist.:	1 1/2" U.N.O.
Holes:	13/16"DIA.	Bolts:	NOTED
Cleaning:	NONE		
Paint:	NO		
DFT:		COLOR:	

Project: WEBSTER UNIVERSITY INTERDISCIPLINARY SCIENCE BUILDING
Customer: PARIC CORPORATION
Owner: WEBSTER UNIVERSITY
Location: WEBSTER GUOVES,MO 63119
Dwn: ZZ Date: 07/06/2016 Ckd: LJ Date: 07/08/2016
Job No. A16013 BAT: DWG#: 849

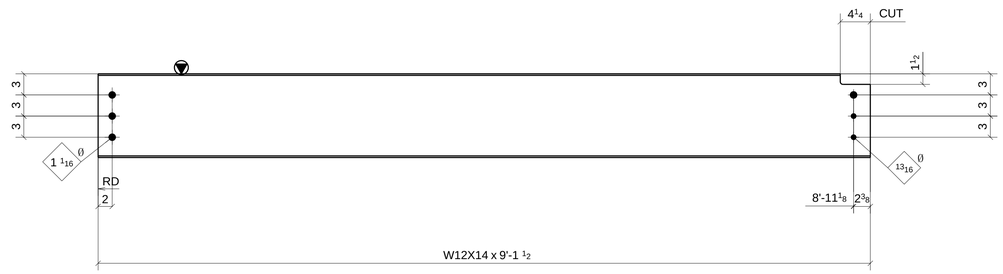

ONE - BEAM ~ 850A

LOCATION: (REF: E8B)
ONE @ 6-7/B.3

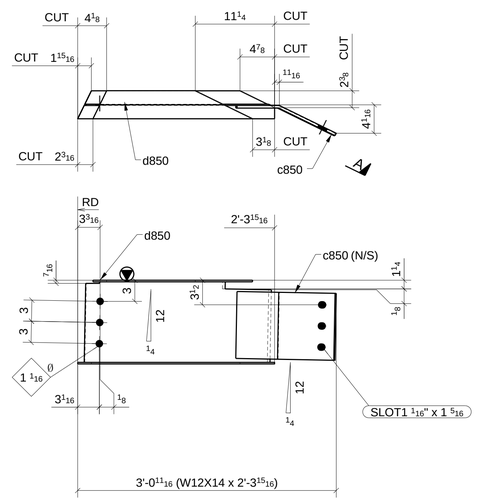

ONE - BEAM ~ 850B

LOCATION: (REF: E8B)
ONE @ 7-7.1/C.3-D

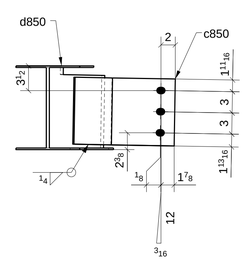

SECTION - A

SHOP BOLT IN SLOTTED HOLE
NEED "HAND TIGHTEN"

FOR APPROVAL

MATERIAL LIST

QTY	MARK	DESCRIPTION	LENGTH	MATERIAL	NOTES
1	850A	W12X14	9'-1 1/2"	A992	
1	850B	W12X14	2'-3 15/16"	A992	
1	c850	BPL3/8"X9 1/2"	1'-3"	A36	
1	d850	BPL5/16"*8"	1'-5 5/8"	A36	

Romac By:		Checked By:	
Beamline By:		Checked By:	

ATLAS IRON WORKS
ST. LOUIS, MO.

A	FOR APPROVAL		07/08/16
Sequence:	8	Ref. E-Plans:	–
Material:	A992 U.N.O.	Edge Dist.:	1 1/2" U.N.O.
Holes:	13/16"DIA.	Bolts:	NOTED
Cleaning:	NONE		
Paint:	NO		
DFT:		COLOR:	

Project:	WEBSTER UNIVERSITY INTERDISCIPLINARY SCIENCE BUILDING		
Customer:	PARIC CORPORATION		
Owner:	WEBSTER UNIVERSITY		
Location:	WEBSTER GUOVES,MO 63119		
Dwn: ZZ	Date: 07/06/2016	Ckd: LJ	Date: 07/08/2016
Job No. A16013	BAT:	DWG#: 850	

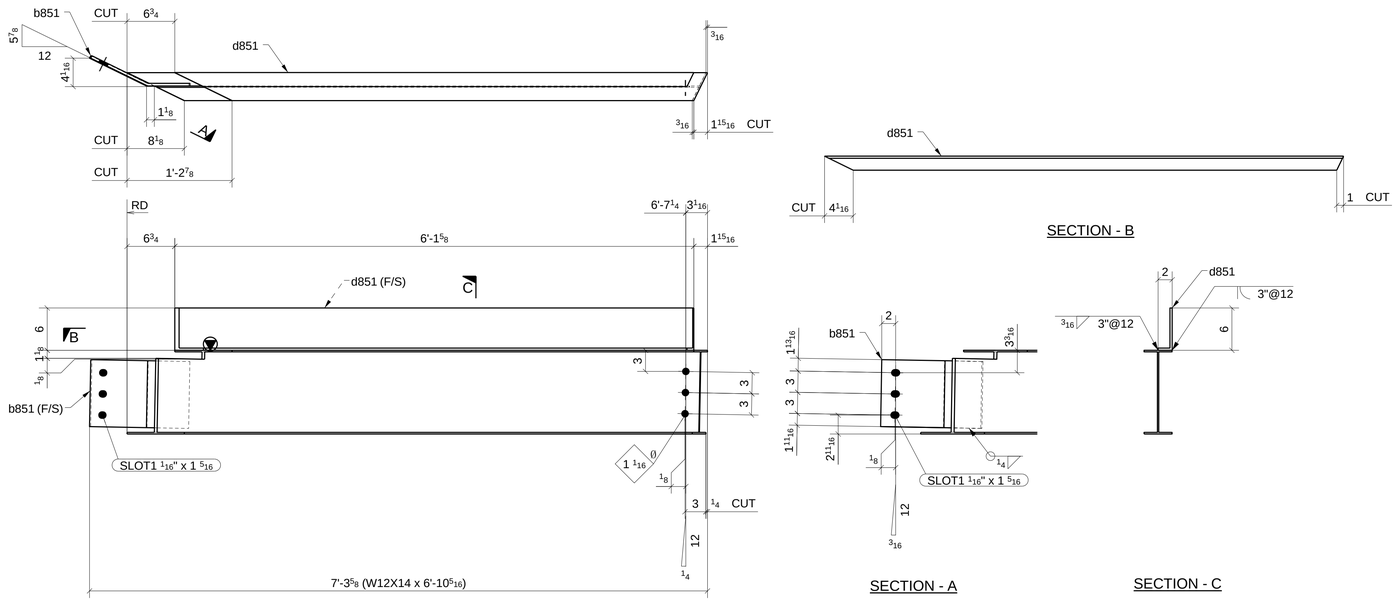

ONE - BEAM ~ 851A

LOCATION: (REF: E8B)
ONE @ 7.1-8/C.3-D

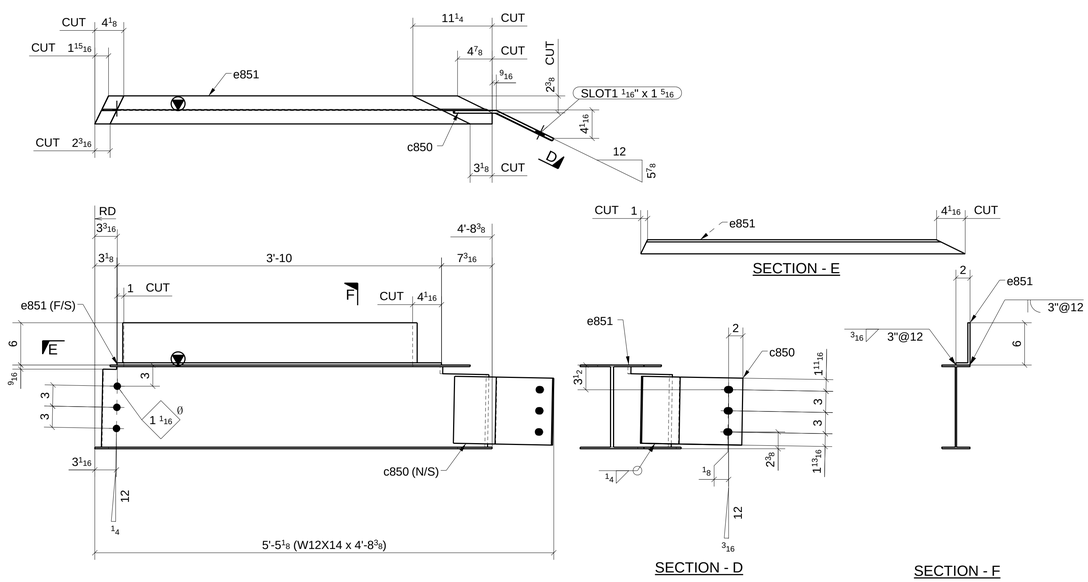

ONE - BEAM ~ 851B

LOCATION: (REF: E8B)
ONE @ 7.1-8/C.3-D

SHOP BOLT IN SLOTTED HOLE
NEED "HAND TIGHTEN"

MATERIAL LIST

QTY	MARK	DESCRIPTION	LENGTH	MATERIAL	NOTES
1	851A	W12X14	6'-10 5/16"	A992	
1	b851	BPL3/8"X9 1/2"	1'-3"	A36	
1	d851	BPL5/16"*8"	6'-1 5/8"	A36	
1	851B	W12X14	4'-8 3/8"	A992	
1	c850	BPL3/8"X9 1/2"	1'-3"	A36	
1	e851	BPL5/16"*8"	3'-10"	A36	

Romac By: Checked By:
Beamline By: Checked By:

A	FOR APPROVAL	07/08/16

Sequence: 8 Ref. E-Plans: –
Material: A992 U.N.O. Edge Dist.: 1 1/2" U.N.O.
Holes: 13/16"DIA. Bolts: NOTED
Cleaning: NONE
Paint: NO
DFT: COLOR:

ATLAS IRON WORKS
ST. LOUIS, MO.

Project: WEBSTER UNIVERSITY INTERDISCIPLINARY SCIENCE BUILDING
Customer: PARIC CORPORATION
Owner: WEBSTER UNIVERSITY
Location: WEBSTER GUOVES,MO 63119
Dwn: ZZ Date: 07/06/2016 Ckd: LJ Date: 07/08/2016
Job No. A16013 BAT: DWG#: 851

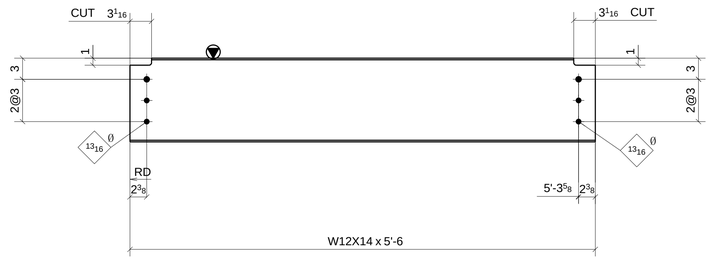

ONE - BEAM ~ 852A

LOCATION: (REF: E8B)
ONE @ 7.1-8/B-C

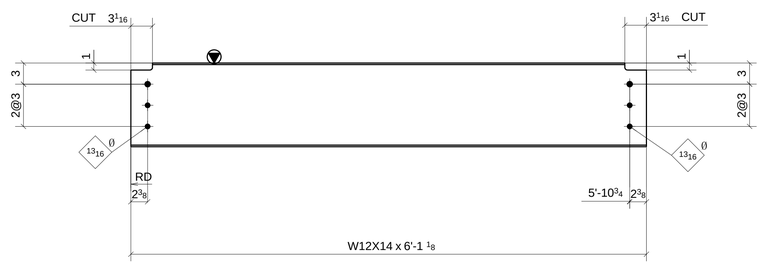

ONE - BEAM ~ 852B

LOCATION: (REF: E8B)
ONE @ 7.1-8/B.3-C

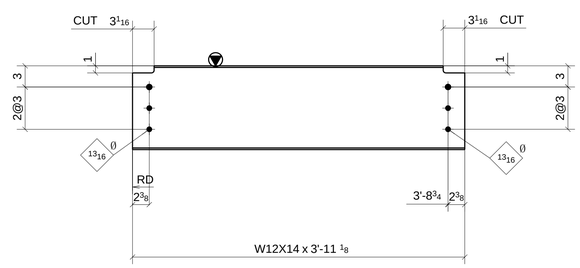

ONE - BEAM ~ 852C

LOCATION: (REF: E8B)
ONE @ 7.1-8/B.3-C

SHOP BOLT IN SLOTTED HOLE
NEED "HAND TIGHTEN"

MATERIAL LIST

QTY	MARK	DESCRIPTION	LENGTH	MATERIAL	NOTES
1	852A	W12X14	5'-6"	A992	
1	852B	W12X14	6'-1 1/8"	A992	
1	852C	W12X14	3'-11 1/8"	A992	

Romac By: Checked By:
Beamline By: Checked By:

A FOR APPROVAL 07/08/16

Sequence: 8 Ref. E-Plans: –
Material: A992 U.N.O. Edge Dist.: 1 1/2" U.N.O.
Holes: 13/16"DIA. Bolts: NOTED
Cleaning: NONE
Paint: NO
DFT: COLOR:

ATLAS IRON WORKS
ST. LOUIS, MO.

Project: WEBSTER UNIVERSITY INTERDISCIPLINARY SCIENCE BUILDING
Customer: PARIC CORPORATION
Owner: WEBSTER UNIVERSITY
Location: WEBSTER GUOVES,MO 63119
Dwn: ZZ Date: 07/06/2016 Ckd: LJ Date: 07/08/2016
Job No. A16013 BAT: DWG#: 852

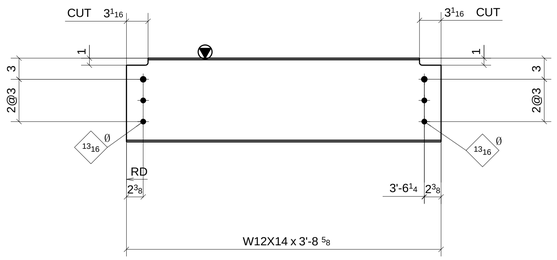

ONE - BEAM ~ 853A

LOCATION: (REF: E8B)
ONE @ 7.1-8/B.3-C

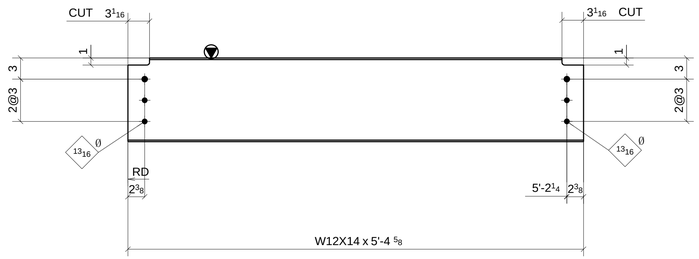

ONE - BEAM ~ 853B

LOCATION: (REF: E8B)
ONE @ 7.1-8/B.3-C

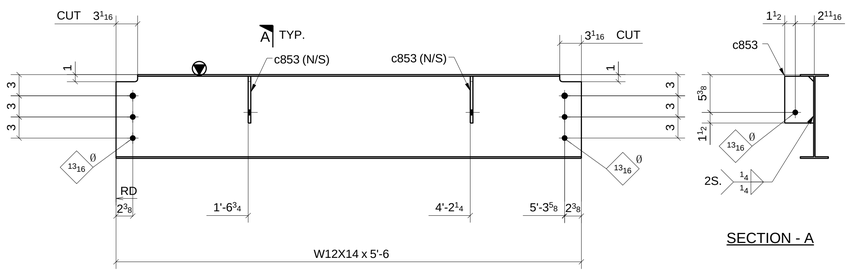

SECTION - A

ONE - BEAM ~ 853C

LOCATION: (REF: E8B)
ONE @ 7.1-8/B-C

SHOP BOLT IN SLOTTED HOLE
NEED "HAND TIGHTEN"

MATERIAL LIST

QTY	MARK	DESCRIPTION	LENGTH	MATERIAL	NOTES
1	853A	W12X14	3'-8 5/8"	A992	
1	853B	W12X14	5'-4 5/8"	A992	
1	853C	W12X14	5'-6"	A992	
2	c853	PL3/8"X4 1/8"	0'-6 5/8"	A36	

Romac By: Checked By:
Beamline By: Checked By:

A	FOR APPROVAL	07/08/16

Sequence: 8 Ref. E-Plans: –
Material: A992 U.N.O. Edge Dist.: 1 1/2" U.N.O.
Holes: 13/16"DIA. Bolts: NOTED
Cleaning: NONE
Paint: NO
DFT: COLOR:

ATLAS IRON WORKS
ST. LOUIS, MO.

Project: WEBSTER UNIVERSITY INTERDISCIPLINARY SCIENCE BUILDING
Customer: PARIC CORPORATION
Owner: WEBSTER UNIVERSITY
Location: WEBSTER GUOVES,MO 63119
Dwn: ZZ Date: 07/06/2016 Ckd: LJ Date: 07/08/2016
Job No. A16013 BAT: DWG#: 853

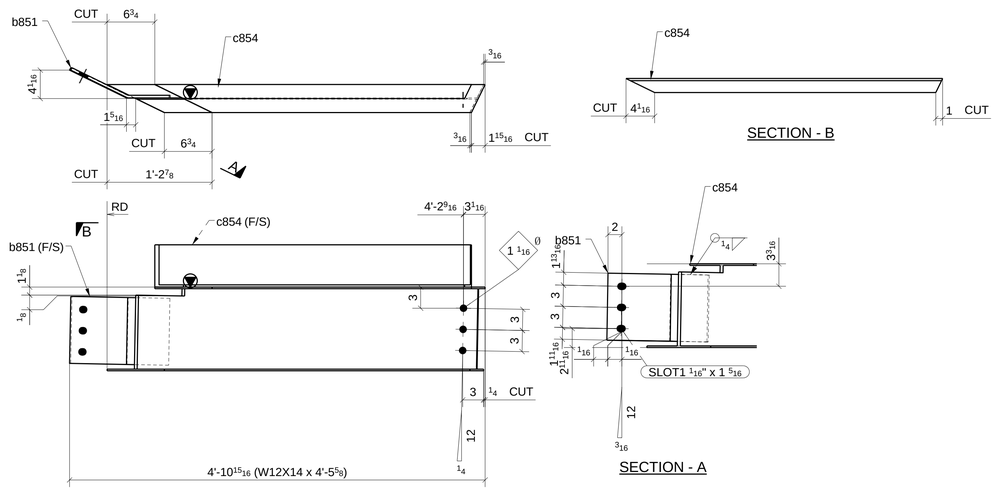

ONE - BEAM ~ 854A

LOCATION: (REF: E8B)
ONE @ 7.1-8/C.3-D

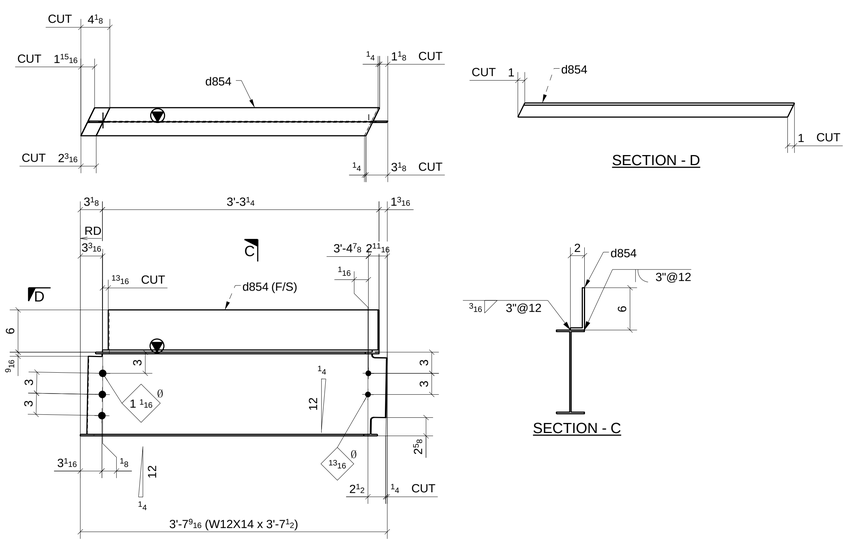

ONE - BEAM ~ 854B

LOCATION: (REF: E8B)
ONE @ 7.1-8/C.3-D

SHOP BOLT IN SLOTTED HOLE
NEED "HAND TIGHTEN"

MATERIAL LIST

QTY	MARK	DESCRIPTION	LENGTH	MATERIAL	NOTES
1	854A	W12X14	4'-5 5/8"	A992	
1	b851	BPL3/8"X9 1/2"	1'-3"	A36	
1	c854	BPL5/16"*8"	3'-8 15/16"	A36	
1	854B	W12X14	3'-7 1/2"	A992	
1	d854	BPL5/16"*8"	3'-3 1/4"	A36	

Romac By: Checked By:
Beamline By: Checked By:

A	FOR APPROVAL	07/08/16

Sequence: 8 Ref. E-Plans: –
Material: A992 U.N.O. Edge Dist.: 1 1/2" U.N.O.
Holes: 13/16"DIA. Bolts: NOTED
Cleaning: NONE
Paint: NO
DFT: COLOR:

ATLAS IRON WORKS
ST. LOUIS, MO.

Project: WEBSTER UNIVERSITY INTERDISCIPLINARY SCIENCE BUILDING
Customer: PARIC CORPORATION
Owner: WEBSTER UNIVERSITY
Location: WEBSTER GUOVES,MO 63119
Dwn: ZZ Date: 07/06/2016 Ckd: LJ Date: 07/08/2016
Job No. A16013 BAT: DWG#: 854

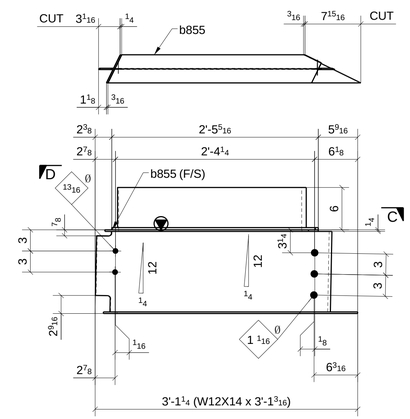

ONE - BEAM ~ 855A

LOCATION: (REF: E8B)
ONE @ 7.1-8/D

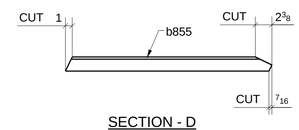

SECTION - D

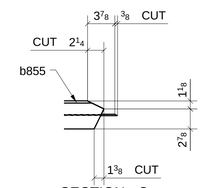

SECTION - C

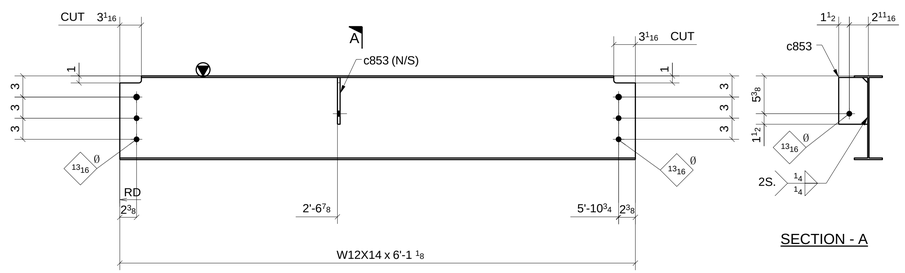

SECTION - A

ONE - BEAM ~ 855B

LOCATION: (REF: E8B)
ONE @ 7.1-8/B.3-C

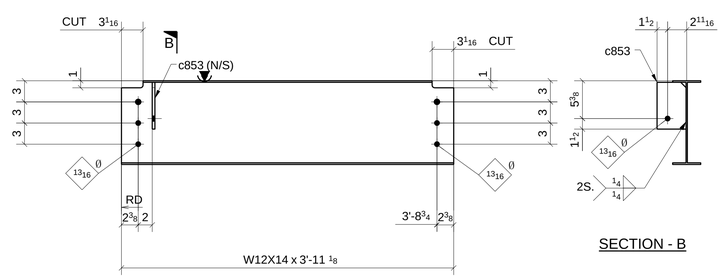

SECTION - B

ONE - BEAM ~ 855C

LOCATION: (REF: E8B)
ONE @ 7.1-8/B.3-C

SHOP BOLT IN SLOTTED HOLE
NEED "HAND TIGHTEN"

FOR APPROVAL

MATERIAL LIST

QTY	MARK	DESCRIPTION	LENGTH	MATERIAL	NOTES
1	855A	W12X14	3'-1 3/16"	A992	
1	b855	BPL5/16"*8"	2'-5 5/16"	A36	
1	855B	W12X14	6'-1 1/8"	A992	
1	c853	PL3/8"X4 1/8"	0'-6 5/8"	A36	
1	855C	W12X14	3'-11 1/8"	A992	
1	c853	PL3/8"X4 1/8"	0'-6 5/8"	A36	

Romac By: Checked By:
Beamline By: Checked By:

A	FOR APPROVAL	07/08/16

Sequence: 8 Ref. E-Plans: –
Material: A992 U.N.O. Edge Dist.: 1 1/2" U.N.O.
Holes: 13/16"DIA. Bolts: NOTED
Cleaning: NONE
Paint: NO
DFT: COLOR:

ATLAS IRON WORKS
ST. LOUIS, MO.

Project: WEBSTER UNIVERSITY INTERDISCIPLINARY SCIENCE BUILDING
Customer: PARIC CORPORATION
Owner: WEBSTER UNIVERSITY
Location: WEBSTER GUOVES,MO 63119
Dwn: ZZ Date: 07/06/2016 Ckd: LJ Date: 07/08/2016
Job No. A16013 BAT: DWG#: 855

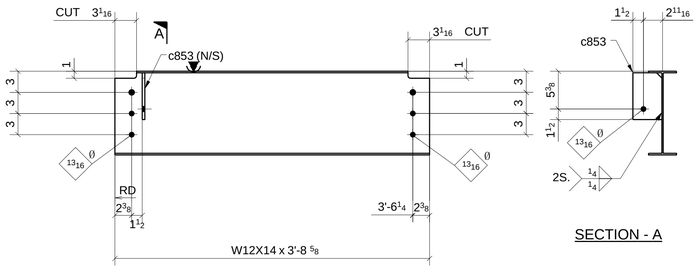

SECTION - A

ONE - BEAM ~ 856A

LOCATION: (REF: E8B)
ONE @ 7.1-8/B.3-C

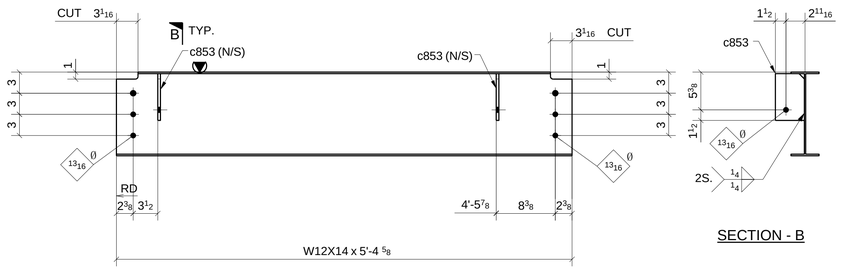

SECTION - B

ONE - BEAM ~ 856B

LOCATION: (REF: E8B)
ONE @ 7.1-8/B.3-C

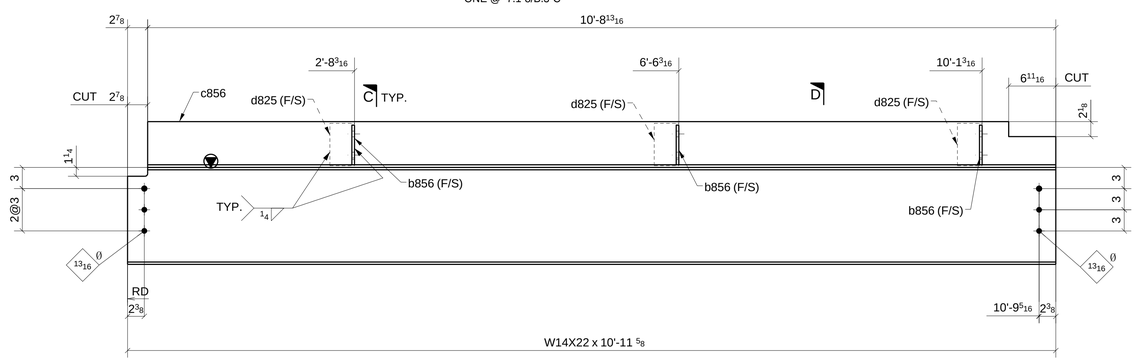

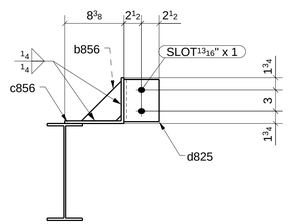

SECTION - C

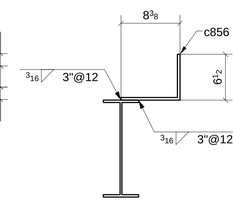

SECTION - D

ONE - BEAM ~ 856C

LOCATION: (REF: E8B)
ONE @ 7-7.1/A.6-B

SHOP BOLT IN SLOTTED HOLE
NEED "HAND TIGHTEN"

MATERIAL LIST

QTY	MARK	DESCRIPTION	LENGTH	MATERIAL	NOTES
1	856A	W12X14	3'-8 5/8"	A992	
1	c853	PL3/8"X4 1/8"	0'-6 5/8"	A36	
1	856B	W12X14	5'-4 5/8"	A992	
2	c853	PL3/8"X4 1/8"	0'-6 5/8"	A36	
1	856C	W14X22	10'-11 11/16"	A992	
3	b856	PL3/8"X5 5/8"	0'-5 5/8"	A36	
1	c856	BPL3/8"X14 7/8"	10'-8 13/16	A36	
3	d825	L5X3-1/2X3/8	0'-6"	A36	

Romac By: Checked By:
Beamline By: Checked By:

A FOR APPROVAL 07/08/16

Sequence: 8 Ref. E-Plans: –
Material: A992 U.N.O. Edge Dist.: 1 1/2" U.N.O.
Holes: 13/16"DIA. Bolts: NOTED
Cleaning: NONE
Paint: NO
DFT: COLOR:

ATLAS IRON WORKS
ST. LOUIS, MO.

Project: WEBSTER UNIVERSITY INTERDISCIPLINARY SCIENCE BUILDING
Customer: PARIC CORPORATION
Owner: WEBSTER UNIVERSITY
Location: WEBSTER GUOVES,MO 63119
Dwn: ZZ Date: 07/06/2016 Ckd: LJ Date: 07/08/2016
Job No. A16013 BAT: DWG#: 856

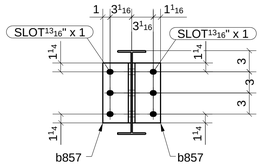

SECTION - A

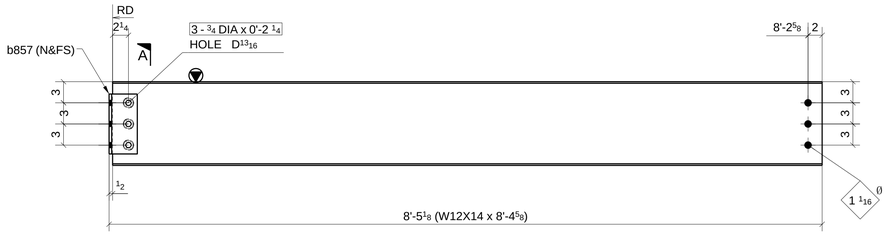

ONE - BEAM ~ 857A

LOCATION: (REF: E8B)
ONE @ 6-7/D

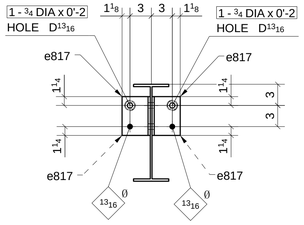

SECTION - B

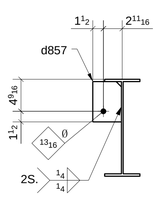

SECTION - C

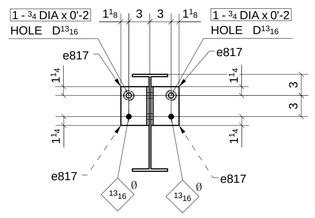

SECTION - D

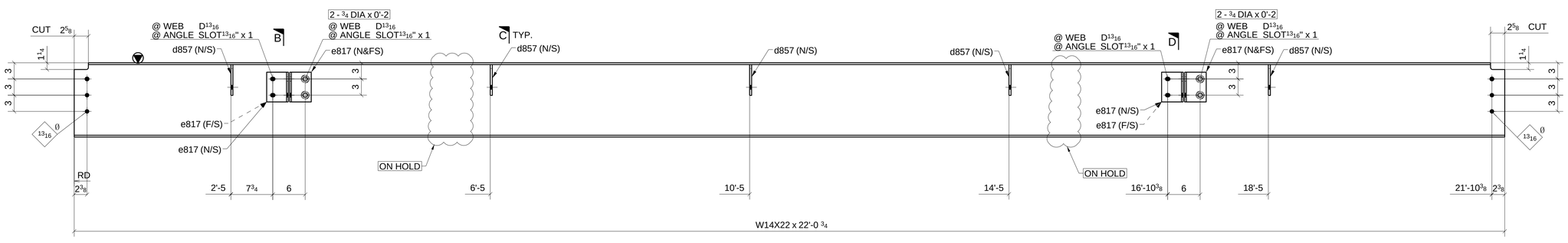

ONE - BEAM ~ 857B

LOCATION: (REF: E8B)
ONE @ 7.1-8/A.6-B

SHOP BOLT IN SLOTTED HOLE
NEED "HAND TIGHTEN"

MATERIAL LIST

QTY	MARK	DESCRIPTION	LENGTH	MATERIAL	NOTES
1	857A	W12X14	8'-4 5/8"	A992	
2	b857	L4X4X3/8	0'-8 1/2"	A36	
3		3/4" DIA. W/N&W	0'-2 1/4"	A325N TC	
1	857B	W14X22	22'-0 3/4"	A992	
5	d857	PL3/8"X4 1/16"	0'-5 11/16"	A36	
8	e817	L4X4X5/16	0'-5 1/2"	A36	
4		3/4" DIA. W/N&W	0'-2"	A325N TC	
4		3/4" DIA. W/N&W	0'-2"	A325N TC	

Romac By: Checked By:
Beamline By: Checked By:

A	FOR APPROVAL	07/08/16

Sequence: 8 Ref. E-Plans: –
Material: A992 U.N.O. Edge Dist.: 1 1/2" U.N.O.
Holes: 13/16"DIA. Bolts: NOTED
Cleaning: NONE
Paint: NO
DFT: COLOR:

ATLAS IRON WORKS
ST. LOUIS, MO.

Project: WEBSTER UNIVERSITY INTERDISCIPLINARY SCIENCE BUILDING
Customer: PARIC CORPORATION
Owner: WEBSTER UNIVERSITY
Location: WEBSTER GUOVES,MO 63119
Dwn: ZZ Date: 07/06/2016 Ckd: LJ Date: 07/08/2016
Job No. A16013 BAT: DWG#: 857

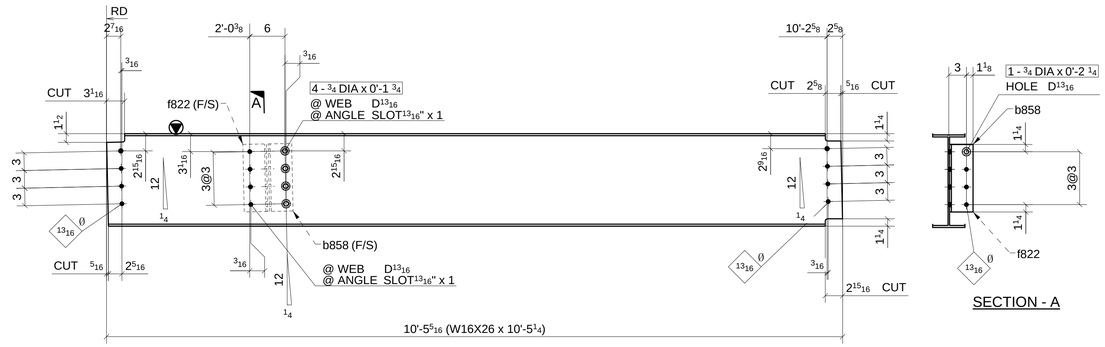

SECTION - A

ONE - BEAM ~ 858A

LOCATION: (REF: E8B)
ONE @ 5-6/B.3-C

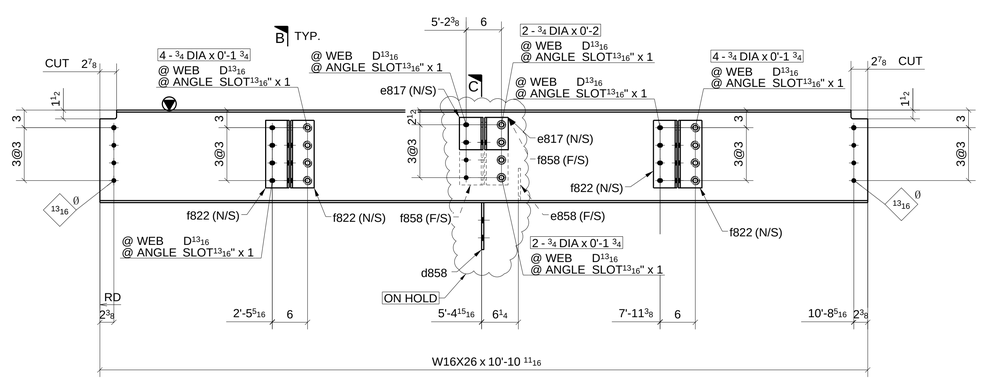

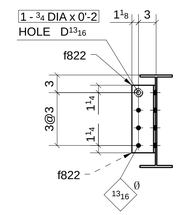

SECTION - B

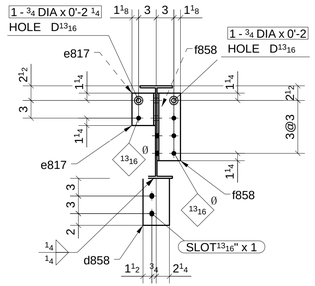

SECTION - C

ONE - BEAM ~ 858B

LOCATION: (REF: E8B)
ONE @ 5-6/B.3-C

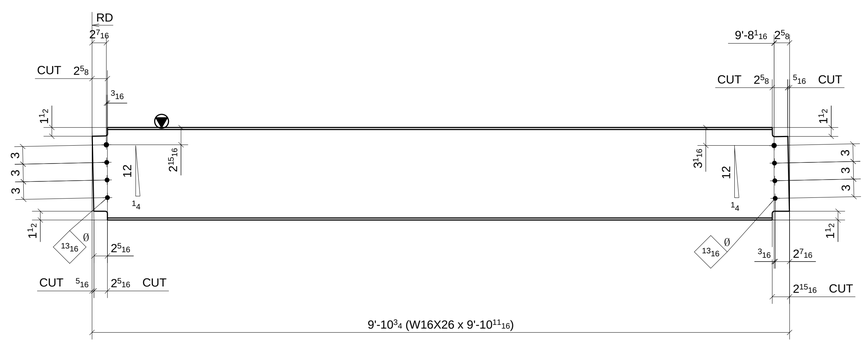

ONE - BEAM ~ 858C

LOCATION: (REF: E8B)
ONE @ 5-6/B.3-C

SHOP BOLT IN SLOTTED HOLE
NEED "HAND TIGHTEN"

MATERIAL LIST

QTY	MARK	DESCRIPTION	LENGTH	MATERIAL	NOTES
1	858A	W16X26	10'-5 1/4"	A992	
1	b858	L4X4X5/16	0'-11 1/2"	A36	
1	f822	L4X4X5/16	0'-11 1/2"	A36	
4		3/4" DIA. W/N&W	0'-1 3/4"	A325N_TC	
1		3/4" DIA. W/N&W	0'-2 1/4"	A325N_TC	
1	858B	W16X26	10'-10 11/16"	A992	
1	d858	PL3/8"X4 1/2"	0'-8"	A36	
2	e817	L4X4X5/16	0'-5 1/2"	A36	
1	e858	PL3/8"X4"	0'-5 1/2"	A36	
4	f822	L4X4X5/16	0'-11 1/2"	A36	
2	f858	L4X4X5/16	0'-11 1/2"	A36	
2		3/4" DIA. W/N&W	0'-1 3/4"	A325N_TC	
2		3/4" DIA. W/N&W	0'-2"	A325N_TC	
1		3/4" DIA. W/N&W	0'-2 1/4"	A325N_TC	
3		3/4" DIA. W/N&W	0'-2"	A325N_TC	
8		3/4" DIA. W/N&W	0'-1 3/4"	A325N_TC	
1	858C	W16X26	9'-10 11/16"	A992	

ON HOLD

Romac By: Checked By:
Beamline By: Checked By:

A FOR APPROVAL 07/08/16

Sequence: 8 Ref. E-Plans: –
Material: A992 U.N.O. Edge Dist.: 1 1/2" U.N.O.
Holes: 13/16"DIA. Bolts: NOTED
Cleaning: NONE
Paint: NO
DFT: COLOR:

ATLAS IRON WORKS
ST. LOUIS, MO.

Project: WEBSTER UNIVERSITY INTERDISCIPLINARY SCIENCE BUILDING
Customer: PARIC CORPORATION
Owner: WEBSTER UNIVERSITY
Location: WEBSTER GUOVES,MO 63119
Dwn: ZZ Date: 07/06/2016 Ckd: LJ Date: 07/08/2016
Job No. A16013 BAT: DWG#: 858

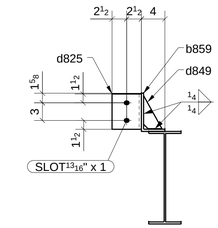

SECTION - A

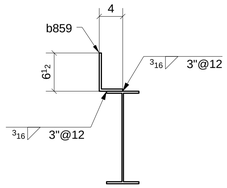

SECTION - B

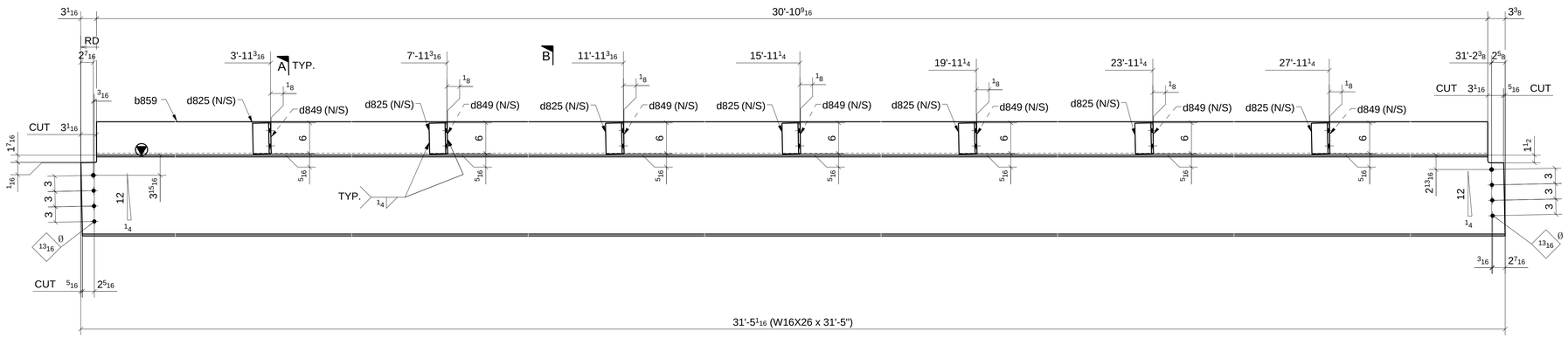

ONE - BEAM ~ 859A

LOCATION: (REF: E8B)
ONE @ 5-6/B

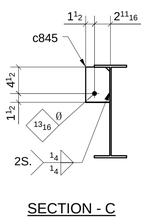

SECTION - C

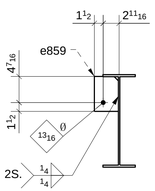

SECTION - D

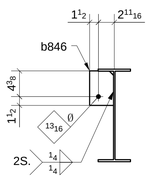

SECTION - E

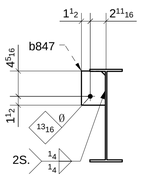

SECTION - F

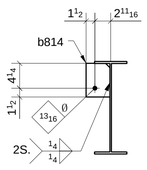

SECTION - G

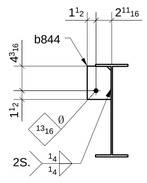

SECTION - H

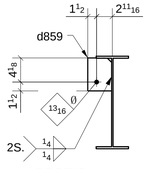

SECTION - I

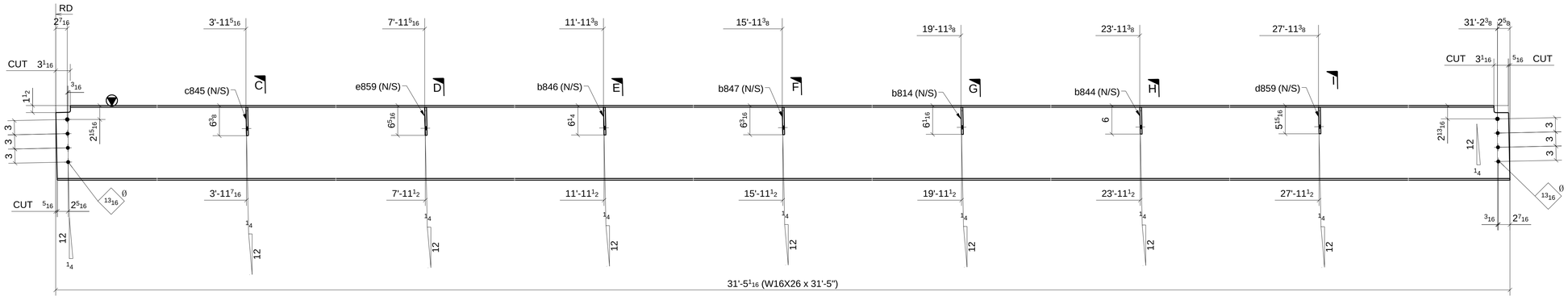

ONE - BEAM ~ 859B

LOCATION: (REF: E8B)
ONE @ 5-6/B-B.3

SHOP BOLT IN SLOTTED HOLE
NEED "HAND TIGHTEN"

MATERIAL LIST

QTY	MARK	DESCRIPTION	LENGTH	MATERIAL	NOTES
1	859A	W16X26	31'-5"	A992	
1	b859	BPL3/8"X10 1/2"	30'-10 9/16	A36	
7	d825	L5X3-1/2X3/8	0'-6"	A36	
7	d849	PL3/8"X3 1/8"	0'-5 5/8"	A36	
1	859B	W16X26	31'-5"	A992	
1	b814	PL3/8"X4 1/16"	0'-5 3/4"	A36	
1	b844	PL3/8"X4 1/16"	0'-5 11/16"	A36	
1	b846	PL3/8"X4 1/16"	0'-5 7/8"	A36	
1	b847	PL3/8"X4 1/16"	0'-5 13/16"	A36	
1	c845	PL3/8"X4 1/16"	0'-6"	A36	
1	d859	PL3/8"X4 1/16"	0'-5 5/8"	A36	
1	e859	PL3/8"X4 1/16"	0'-5 15/16"	A36	

Romac By: Checked By:
Beamline By: Checked By:

ATLAS IRON WORKS
ST. LOUIS, MO.

A	FOR APPROVAL	07/08/16

Sequence: 8 Ref. E-Plans: –
Material: A992 U.N.O. Edge Dist.: 1 1/2" U.N.O.
Holes: 13/16"DIA. Bolts: NOTED
Cleaning: NONE
Paint: NO
DFT: COLOR:

Project: WEBSTER UNIVERSITY INTERDISCIPLINARY SCIENCE BUILDING
Customer: PARIC CORPORATION
Owner: WEBSTER UNIVERSITY
Location: WEBSTER GUOVES,MO 63119
Dwn: ZZ Date: 07/06/2016 Ckd: LJ Date: 07/08/2016
Job No. A16013 BAT: DWG#: 859

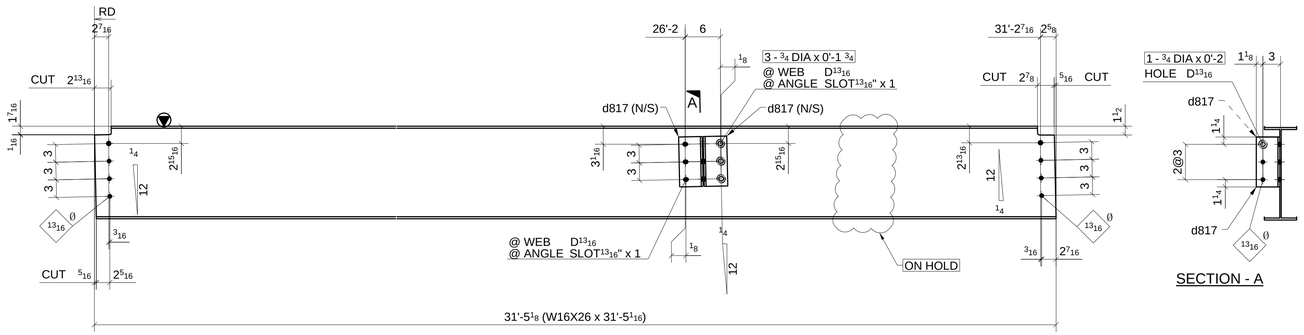

SECTION - A

ONE - BEAM ~ 860A

LOCATION: (REF: E8B)
ONE @ 5-6/C.3-D

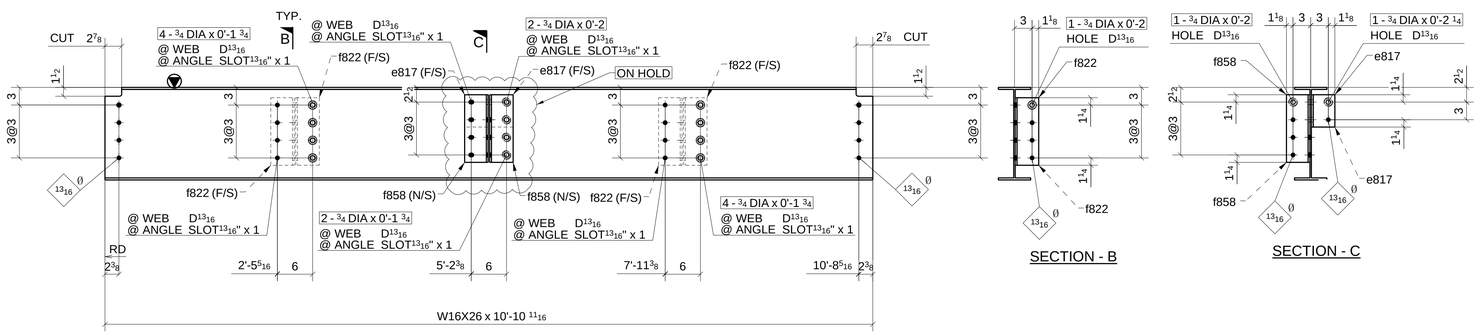

SECTION - B

SECTION - C

ONE - BEAM ~ 860B

LOCATION: (REF: E8B)
ONE @ 5-6/B.3-C

SHOP BOLT IN SLOTTED HOLE
NEED "HAND TIGHTEN"

FOR APPROVAL

MATERIAL LIST

	QTY	MARK	DESCRIPTION	LENGTH	MATERIAL	NOTES
	1	860A	W16X26	31'-5 1/16"	A992	
	2	d817	L4X4X5/16	0'-8 1/2"	A36	
	3		3/4" DIA. W/N&W	0'-1 3/4"	A325N TC	
ON HOLD	1		3/4" DIA. W/N&W	0'-2"	A325N TC	
	1	860B	W16X26	10'-10 11/16"	A992	
	2	e817	L4X4X5/16	0'-5 1/2"	A36	
	4	f822	L4X4X5/16	0'-11 1/2"	A36	
	2	f858	L4X4X5/16	0'-11 1/2"	A36	
	2		3/4" DIA. W/N&W	0'-1 3/4"	A325N TC	
	2		3/4" DIA. W/N&W	0'-2"	A325N TC	
	1		3/4" DIA. W/N&W	0'-2 1/4"	A325N TC	
	3		3/4" DIA. W/N&W	0'-2"	A325N TC	
	8		3/4" DIA. W/N&W	0'-1 3/4"	A325N TC	

Romac By: Checked By:
Beamline By: Checked By:

ATLAS IRON WORKS
ST. LOUIS, MO.

A	FOR APPROVAL		07/08/16
Sequence:	8	Ref. E-Plans:	–
Material:	A992 U.N.O.	Edge Dist.:	1 1/2" U.N.O.
Holes:	13/16"DIA.	Bolts:	NOTED
Cleaning:	NONE		
Paint:	NO		
DFT:		COLOR:	

Project:	WEBSTER UNIVERSITY INTERDISCIPLINARY SCIENCE BUILDING		
Customer:	PARIC CORPORATION		
Owner:	WEBSTER UNIVERSITY		
Location:	WEBSTER GUOVES,MO 63119		
Dwn: ZZ	Date: 07/06/2016	Ckd: LJ	Date: 07/08/2016
Job No. A16013	BAT:	DWG#: 860	

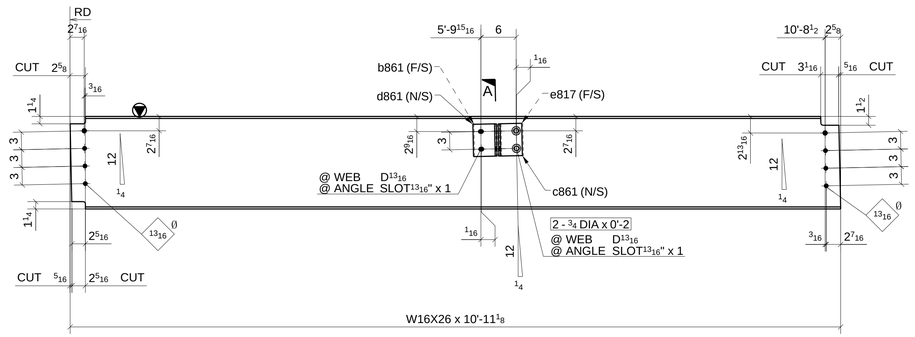

ONE - BEAM ~ 861A

LOCATION: (REF: E8B)
ONE @ 5-6/B.3-C

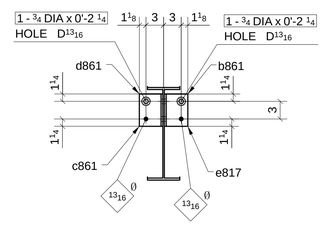

SECTION - A

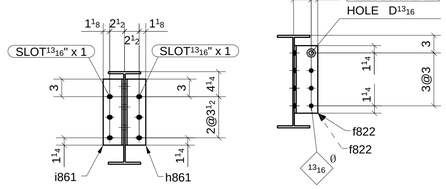

SECTION - B

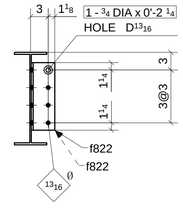

SECTION - C

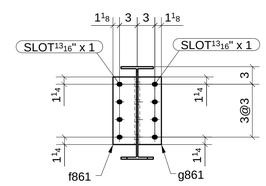

SECTION - D

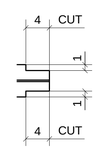

SECTION - E

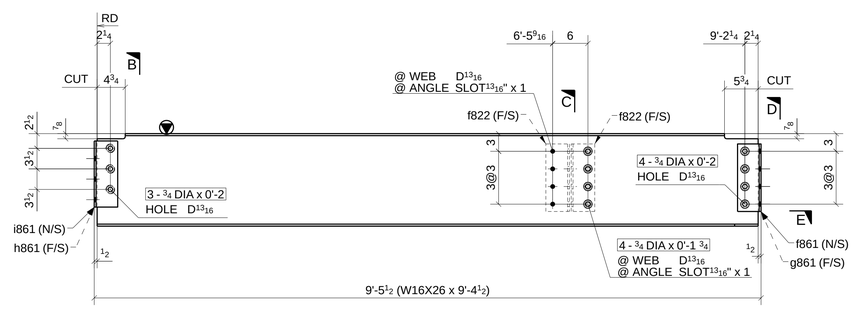

ONE - BEAM ~ 861B

LOCATION: (REF: E8B)
ONE @ 6-7/C

SHOP BOLT IN SLOTTED HOLE
NEED "HAND TIGHTEN"

MATERIAL LIST

QTY	MARK	DESCRIPTION	LENGTH	MATERIAL	NOTES
1	861A	W16X26	10'-11 1/8"	A992	
1	b861	L4X4X5/16	0'-5 1/2"	A36	
1	c861	L4X4X5/16	0'-5 1/2"	A36	
1	d861	L4X4X5/16	0'-5 1/2"	A36	
1	e817	L4X4X5/16	0'-5 1/2"	A36	
2		3/4" DIA. W/N&W	0'-2"	A325N TC	
2		3/4" DIA. W/N&W	0'-2 1/4"	A325N TC	
1	861B	W16X26	9'-4 1/2"	A992	
2	f822	L4X4X5/16	0'-11 1/2"	A36	
1	f861	L4X4X5/16	0'-11 1/2"	A36	
1	g861	L4X4X5/16	0'-11 1/2"	A36	
1	h861	L4X3-1/2X5/16	0'-11 1/4"	A36	
1	i861	L4X3-1/2X5/16	0'-11 1/4"	A36	
3		3/4" DIA. W/N&W	0'-2"	A325N TC	
1		3/4" DIA. W/N&W	0'-2 1/4"	A325N TC	
4		3/4" DIA. W/N&W	0'-1 3/4"	A325N TC	
4		3/4" DIA. W/N&W	0'-2"	A325N TC	

Romac By: Checked By:
Beamline By: Checked By:

A FOR APPROVAL 07/08/16

Sequence: 8 Ref. E-Plans: –
Material: A992 U.N.O. Edge Dist.: 1 1/2" U.N.O.
Holes: 13/16"DIA. Bolts: NOTED
Cleaning: NONE
Paint: NO
DFT: COLOR:

ATLAS IRON WORKS
ST. LOUIS, MO.

Project: WEBSTER UNIVERSITY INTERDISCIPLINARY SCIENCE BUILDING
Customer: PARIC CORPORATION
Owner: WEBSTER UNIVERSITY
Location: WEBSTER GUOVES,MO 63119
Dwn: ZZ Date: 07/06/2016 Ckd: LJ Date: 07/08/2016
Job No. A16013 BAT: DWG#: 861

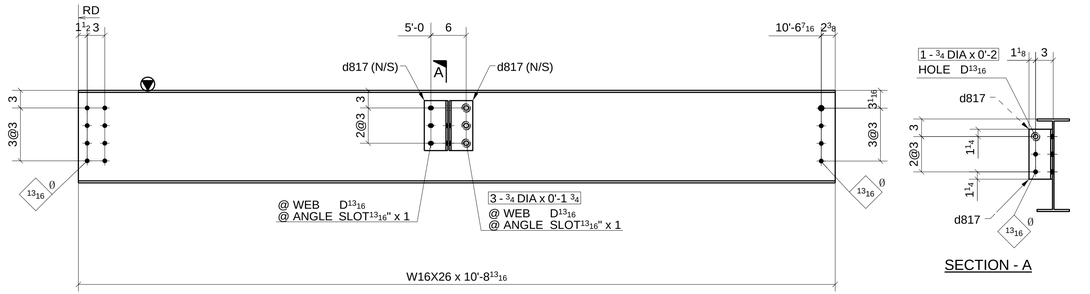

SECTION - A

ONE - BEAM ~ 862A

LOCATION:
ONE @ 7.1/A.6-B

(REF: E8B)

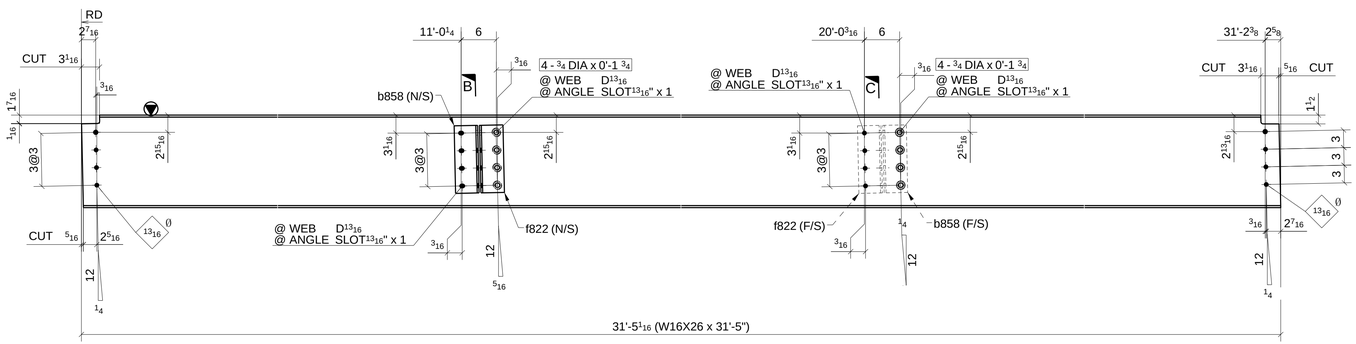

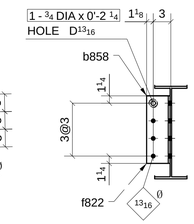

SECTION - B

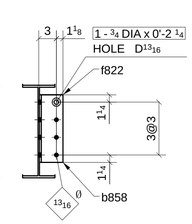

SECTION - C

ONE - BEAM ~ 862B

LOCATION:
ONE @ 5-6/B.3-C

(REF: E8B)

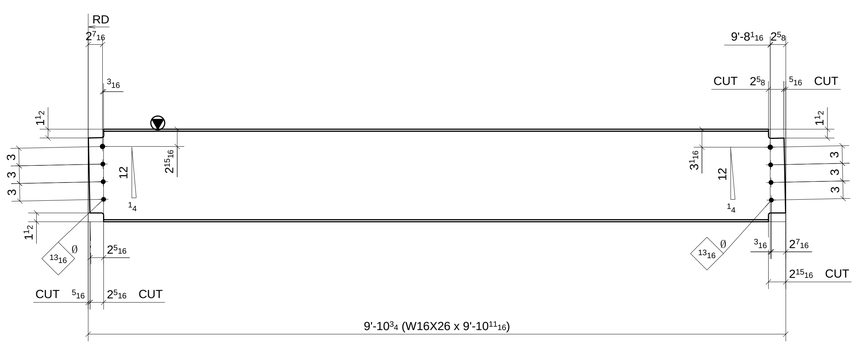

ONE - BEAM ~ 862C

LOCATION:
ONE @ 5-6/B.3-C

(REF: E8B)

SHOP BOLT IN SLOTTED HOLE
NEED "HAND TIGHTEN"

MATERIAL LIST

QTY	MARK	DESCRIPTION	LENGTH	MATERIAL	NOTES
1	862A	W16X26	10'-8 13/16"	A992	
2	d817	L4X4X5/16	0'-8 1/2"	A36	
3		3/4" DIA. W/N&W	0'-1 3/4"	A325N TC	
1		3/4" DIA. W/N&W	0'-2"	A325N TC	
1	862B	W16X26	31'-5"	A992	
2	b858	L4X4X5/16	0'-11 1/2"	A36	
2	f822	L4X4X5/16	0'-11 1/2"	A36	
2		3/4" DIA. W/N&W	0'-2 1/4"	A325N TC	
8		3/4" DIA. W/N&W	0'-1 3/4"	A325N TC	
1	862C	W16X26	9'-10 11/16"	A992	

Romac By: Checked By:
Beamline By: Checked By:

A FOR APPROVAL 07/08/16

Sequence: 8 Ref. E-Plans: –
Material: A992 U.N.O. Edge Dist.: 1 1/2" U.N.O.
Holes: 13/16"DIA. Bolts: NOTED
Cleaning: NONE
Paint: NO
DFT: COLOR:

ATLAS IRON WORKS
ST. LOUIS, MO.

Project: WEBSTER UNIVERSITY INTERDISCIPLINARY SCIENCE BUILDING
Customer: PARIC CORPORATION
Owner: WEBSTER UNIVERSITY
Location: WEBSTER GUOVES,MO 63119
Dwn: ZZ Date: 07/06/2016 Ckd: LJ Date: 07/08/2016
Job No. A16013 BAT: DWG#: 862

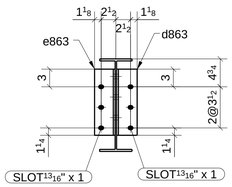

SECTION - A

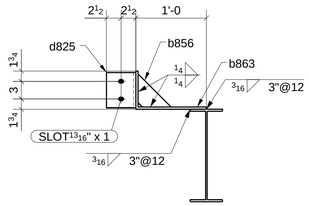

SECTION - B

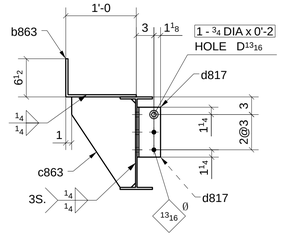

SECTION - C

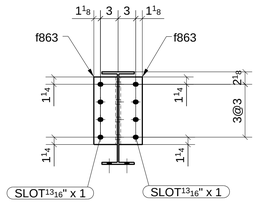

SECTION - D

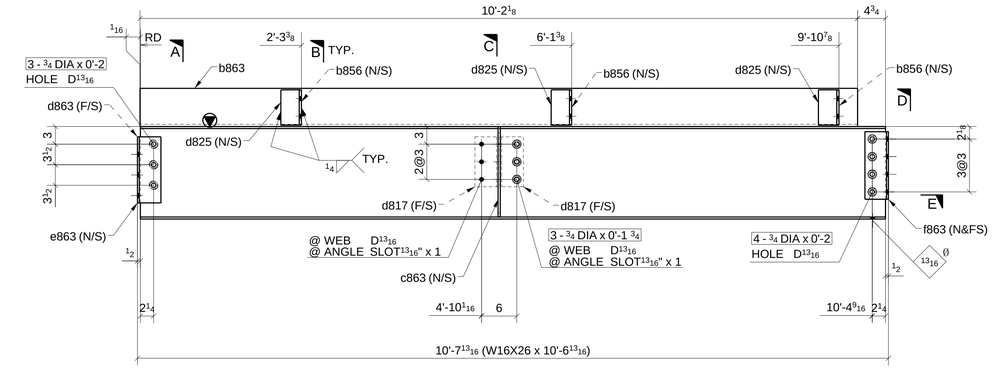

ONE - BEAM ~ 863A

LOCATION: (REF: E8B)
ONE @ 8/A.6-B

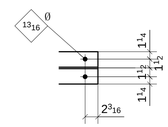

SECTION - E

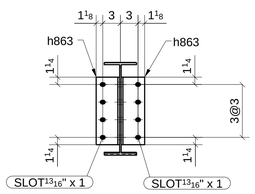

SECTION - F

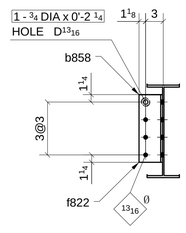

SECTION - G

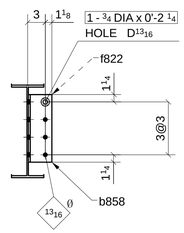

SECTION - H

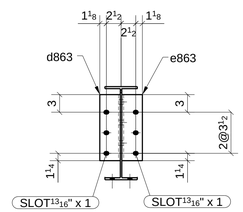

SECTION - I

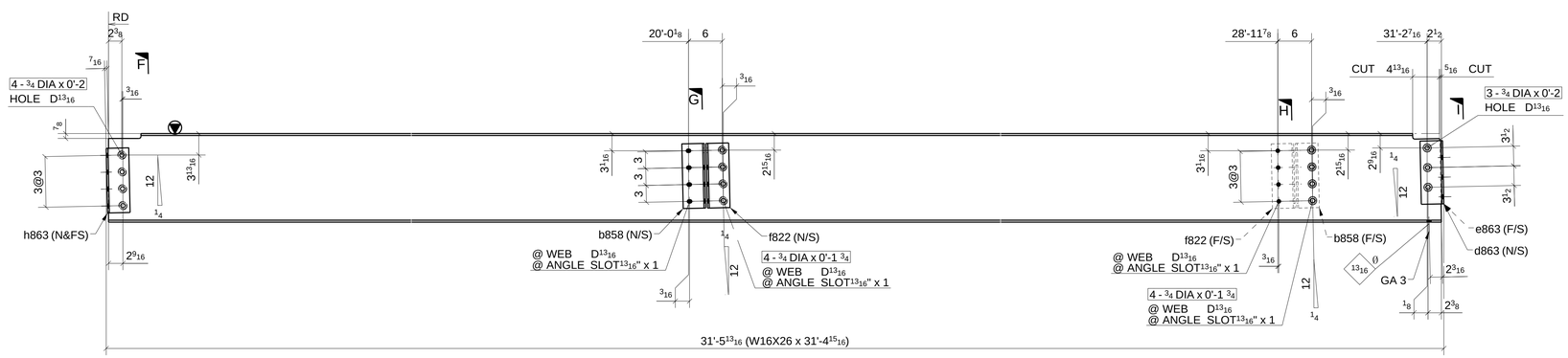

ONE - BEAM ~ 863B

LOCATION: (REF: E8B)
ONE @ 5-6/C

SHOP BOLT IN SLOTTED HOLE
NEED "HAND TIGHTEN"

MATERIAL LIST

QTY	MARK	DESCRIPTION	LENGTH	MATERIAL	NOTES
1	863A	W16X26	10'-6 13/16"	A992	
3	b856	PL3/8"X5 5/8"	0'-5 5/8"	A36	
1	b863	BPL3/8"X18 1/2"	10'-2 1/8"	A36	
1	c863	PL3/8"X10 7/8"	1'-3 3/8"	A36	
2	d817	L4X4X5/16	0'-8 1/2"	A36	
3	d825	L5X3-1/2X3/8	0'-6"	A36	
1	d863	L4X3-1/2X5/16	0'-11 1/4"	A36	
1	e863	L4X3-1/2X5/16	0'-11 1/4"	A36	
2	f863	L4X4X5/16	0'-11 1/2"	A36	
1		3/4" DIA. W/N&W	0'-2"	A325N TC	
3		3/4" DIA. W/N&W	0'-2"	A325N TC	
4		3/4" DIA. W/N&W	0'-2"	A325N TC	
3		3/4" DIA. W/N&W	0'-1 3/4"	A325N TC	
1	863B	W16X26	31'-4 15/16"	A992	
2	b858	L4X4X5/16	0'-11 1/2"	A36	
1	d863	L4X3-1/2X5/16	0'-11 1/4"	A36	
1	e863	L4X3-1/2X5/16	0'-11 1/4"	A36	
2	f822	L4X4X5/16	0'-11 1/2"	A36	
2	h863	L4X4X5/16	0'-11 1/2"	A36	
4		3/4" DIA. W/N&W	0'-2"	A325N TC	
2		3/4" DIA. W/N&W	0'-2 1/4"	A325N TC	
3		3/4" DIA. W/N&W	0'-2"	A325N TC	
8		3/4" DIA. W/N&W	0'-1 3/4"	A325N TC	

Romac By: Checked By:
Beamline By: Checked By:

ATLAS IRON WORKS
ST. LOUIS, MO.

A	FOR APPROVAL		07/08/16
Sequence:	8	Ref. E-Plans:	–
Material:	A992 U.N.O.	Edge Dist.:	1 1/2" U.N.O.
Holes:	13/16"DIA.	Bolts:	NOTED
Cleaning:	NONE		
Paint:	NO		
DFT:		COLOR:	

Project:	WEBSTER UNIVERSITY INTERDISCIPLINARY SCIENCE BUILDING		
Customer:	PARIC CORPORATION		
Owner:	WEBSTER UNIVERSITY		
Location:	WEBSTER GUOVES,MO 63119		
Dwn: ZZ	Date: 07/06/2016	Ckd: LJ	Date: 07/08/2016
Job No. A16013	BAT:	DWG#: 863	

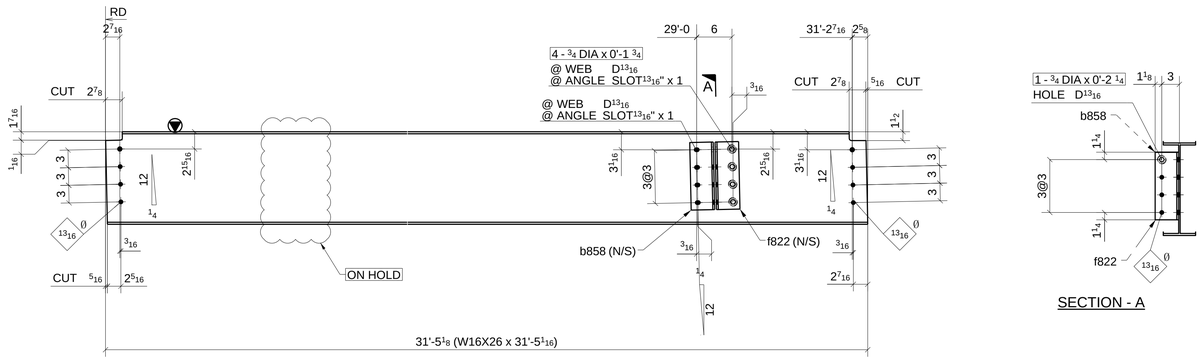

ONE - BEAM ~ 864A

LOCATION: (REF: E8B)
ONE @ 5-6/C-C.3

SECTION - A

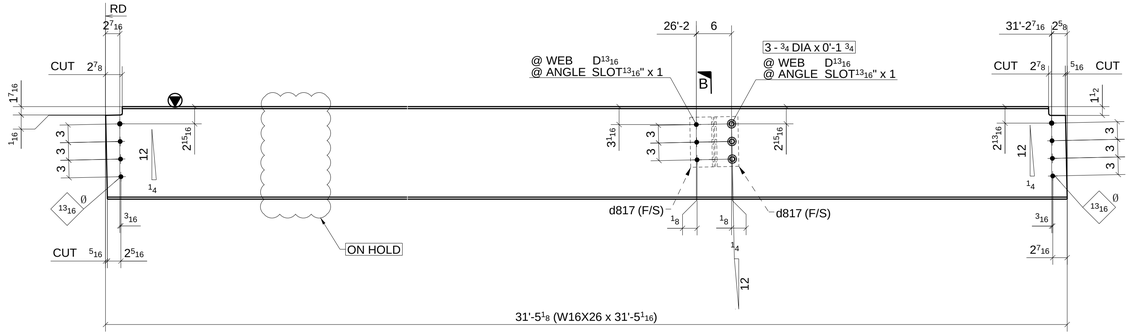

ONE - BEAM ~ 864B

LOCATION: (REF: E8B)
ONE @ 5-6/C.3-D

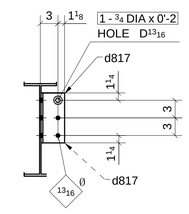

SECTION - B

SHOP BOLT IN SLOTTED HOLE
NEED "HAND TIGHTEN"

MATERIAL LIST

QTY	MARK	DESCRIPTION	LENGTH	MATERIAL	NOTES
1	864A	W16X26	31'-5 1/16"	A992	
1	b858	L4X4X5/16	0'-11 1/2"	A36	
1	f822	L4X4X5/16	0'-11 1/2"	A36	
4		3/4" DIA. W/N&W	0'-1 3/4"	A325N_TC	
1		3/4" DIA. W/N&W	0'-2 1/4"	A325N_TC	
1	864B	W16X26	31'-5 1/16"	A992	
2	d817	L4X4X5/16	0'-8 1/2"	A36	
3		3/4" DIA. W/N&W	0'-1 3/4"	A325N_TC	
1		3/4" DIA. W/N&W	0'-2"	A325N_TC	

Romac By: Checked By:
Beamline By: Checked By:

A FOR APPROVAL 07/08/16

Sequence: 8 Ref. E-Plans: –
Material: A992 U.N.O. Edge Dist.: 1 1/2" U.N.O.
Holes: 13/16"DIA. Bolts: NOTED
Cleaning: NONE
Paint: NO
DFT: COLOR:

ATLAS IRON WORKS
ST. LOUIS, MO.

Project: WEBSTER UNIVERSITY INTERDISCIPLINARY SCIENCE BUILDING
Customer: PARIC CORPORATION
Owner: WEBSTER UNIVERSITY
Location: WEBSTER GUOVES,MO 63119
Dwn: ZZ Date: 07/06/2016 Ckd: LJ Date: 07/08/2016
Job No. A16013 BAT: DWG#: 864

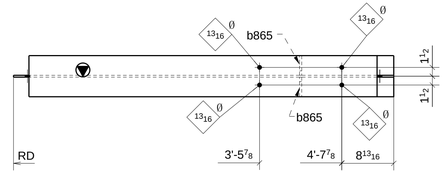

SECTION - B

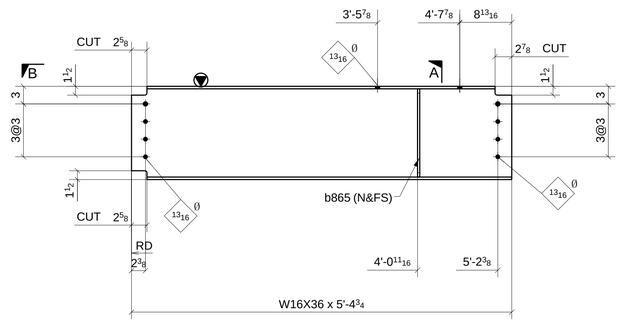

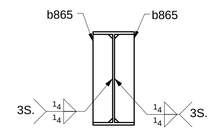

SECTION - A

ONE - BEAM ~ 865A

LOCATION:
ONE @ 5-6/B.3-C

(REF: E8B)

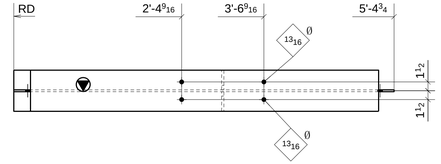

SECTION - D

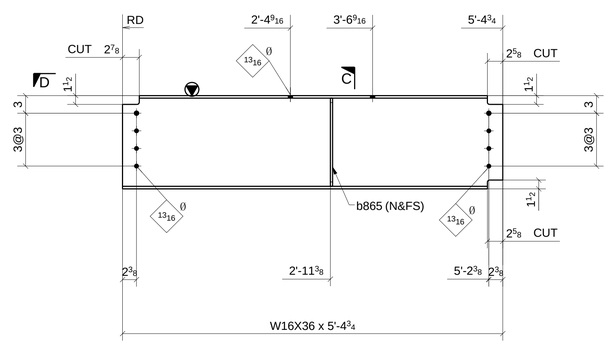

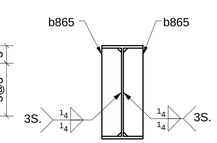

SECTION - C

ONE - BEAM ~ 865B

LOCATION:
ONE @ 5-6/B.3-C

(REF: E8B)

SHOP BOLT IN SLOTTED HOLE
NEED "HAND TIGHTEN"

FOR APPROVAL

MATERIAL LIST

QTY	MARK	DESCRIPTION	LENGTH	MATERIAL	NOTES
1	865A	W16X36	5'-4 3/4"	A992	
2	b865	PL3/8"X3 3/8"	1'-3"	A36	
1	865B	W16X36	5'-4 3/4"	A992	
2	b865	PL3/8"X3 3/8"	1'-3"	A36	

Romac By: _____ Checked By: _____

Beamline By: _____ Checked By: _____

A	FOR APPROVAL	07/08/16

Sequence: 8 Ref. E-Plans: –

Material: A992 U.N.O. Edge Dist.: 1 1/2" U.N.O.

Holes: 13/16"DIA. Bolts: NOTED

Cleaning: NONE

Paint: NO

DFT: _____ COLOR: _____

ATLAS IRON WORKS
ST. LOUIS, MO.

Project: WEBSTER UNIVERSITY INTERDISCIPLINARY SCIENCE BUILDING

Customer: PARIC CORPORATION

Owner: WEBSTER UNIVERSITY

Location: WEBSTER GUOVES,MO 63119

Dwn: ZZ Date: 07/06/2016 Ckd: LJ Date: 07/08/2016

Job No. A16013 BAT: _____ DWG#: 865

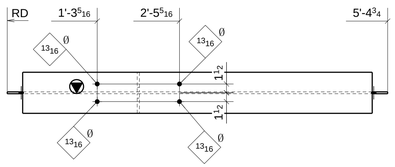

SECTION - B

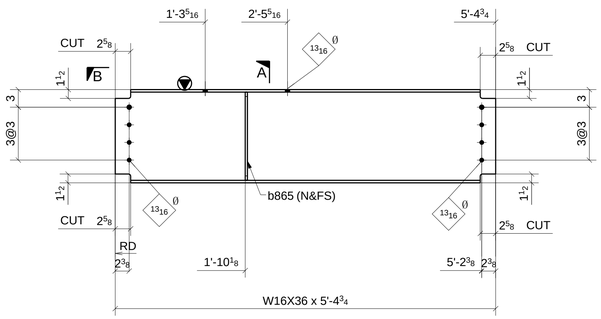

ONE - BEAM ~ 866A

LOCATION: (REF: E8B)
ONE @ 5-6/B.3-C

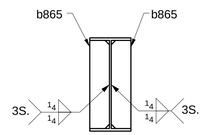

SECTION - A

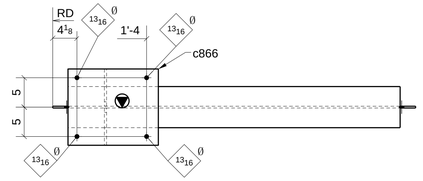

SECTION - D

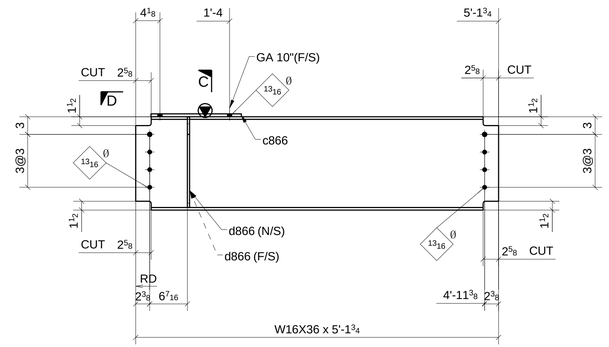

ONE - BEAM ~ 866B

LOCATION: (REF: E8B)
ONE @ 5-6/C-C.3

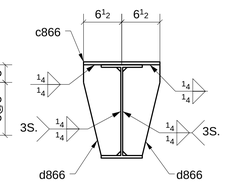

SECTION - C

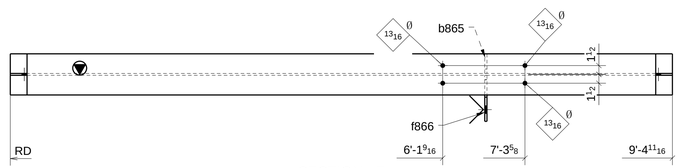

SECTION - F

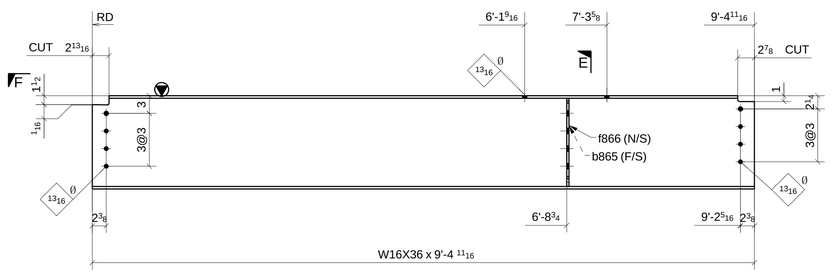

ONE - BEAM ~ 866C

LOCATION: (REF: E8B)
ONE @ 6-7/C-C.3

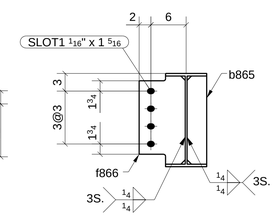

SECTION - E

SHOP BOLT IN SLOTTED HOLE
NEED "HAND TIGHTEN"

MATERIAL LIST

QTY	MARK	DESCRIPTION	LENGTH	MATERIAL	NOTES
1	866A	W16X36	5'-4 3/4"	A992	
2	b865	PL3/8"X3 3/8"	1'-3"	A36	
1	866B	W16X36	5'-1 3/4"	A992	
1	c866	PL1/2"X13"	1'-3 3/8"	A36	
2	d866	PL3/8"X6 3/8"	1'-3 7/16"	A36	
1	866C	W16X36	9'-4 11/16"	A992	
1	b865	PL3/8"X3 3/8"	1'-3"	A36	
1	f866	PL3/8"X7 13/16"	1'-3"	A36	

Romac By:		Checked By:	
Beamline By:		Checked By:	

A FOR APPROVAL 07/08/16

Sequence:	8	Ref. E-Plans:	–
Material:	A992 U.N.O.	Edge Dist.:	1 1/2" U.N.O.
Holes:	13/16"DIA.	Bolts:	NOTED
Cleaning:	NONE		
Paint:	NO		
DFT:		COLOR:	

ATLAS IRON WORKS
ST. LOUIS, MO.

Project:	WEBSTER UNIVERSITY INTERDISCIPLINARY SCIENCE BUILDING				
Customer:	PARIC CORPORATION				
Owner:	WEBSTER UNIVERSITY				
Location:	WEBSTER GUOVES,MO 63119				
Dwn:	ZZ	Date: 07/06/2016	Ckd: LJ	Date:	07/08/2016
Job No.	A16013	BAT:		DWG#:	866

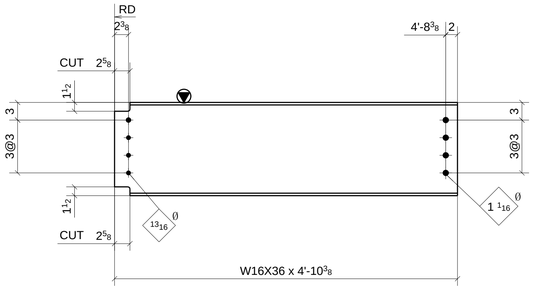

ONE - BEAM ~ 867A

LOCATION: (REF: E8B)
ONE @ 6-7/C-C.3

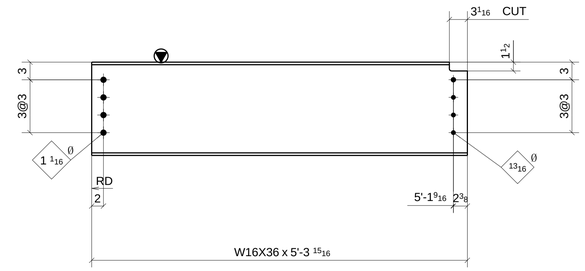

2 - BEAMS ~ 867B

LOCATION: (REF: E8B)
ONE @ 7.1-8/B-B.3
ONE @ 7.1-8/B-B.3

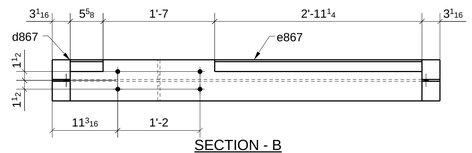

SECTION - B

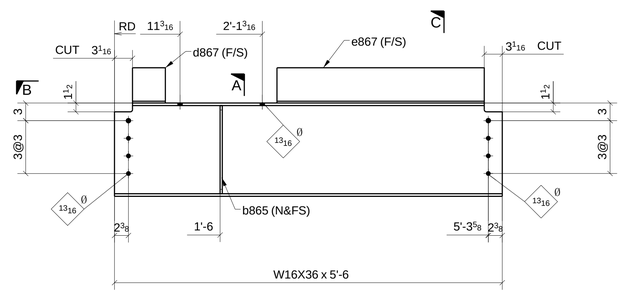

ONE - BEAM ~ 867C

LOCATION: (REF: E8B)
ONE @ 7-7.1/B-C

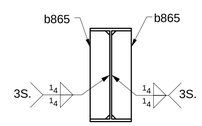

SECTION - A

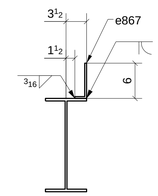

SECTION - C

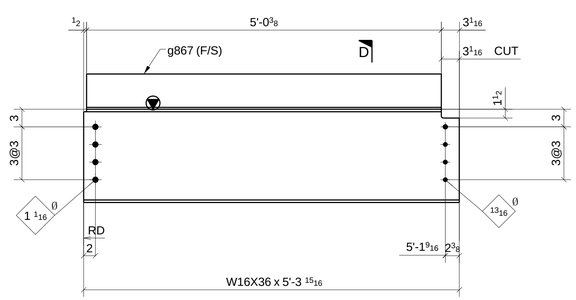

ONE - BEAM ~ 867D

LOCATION: (REF: E8B)
ONE @ 7-7.1/B-B.3

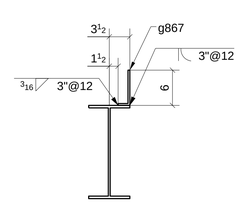

SECTION - D

SHOP BOLT IN SLOTTED HOLE
NEED "HAND TIGHTEN"

MATERIAL LIST

QTY	MARK	DESCRIPTION	LENGTH	MATERIAL	NOTES
1	867A	W16X36	4'-10 3/8"	A992	
2	867B	W16X36	5'-3 15/16"	A992	
1	867C	W16X36	5'-6"	A992	
2	b865	PL3/8"X3 3/8"	1'-3"	A36	
1	d867	BPL5/16"*8"	0'-5 5/8"	A36	
1	e867	BPL5/16"*8"	2'-11 1/4"	A36	
1	867D	W16X36	5'-3 15/16"	A992	
1	g867	BPL5/16"*8"	5'-0 3/8"	A36	

Romac By: Checked By:
Beamline By: Checked By:

A	FOR APPROVAL		07/08/16
Sequence:	8	Ref. E-Plans:	–
Material:	A992 U.N.O.	Edge Dist.:	1 1/2" U.N.O.
Holes:	13/16"DIA.	Bolts:	NOTED
Cleaning:	NONE		
Paint:	NO		
DFT:		COLOR:	

ATLAS IRON WORKS
ST. LOUIS, MO.

Project:	WEBSTER UNIVERSITY INTERDISCIPLINARY SCIENCE BUILDING		
Customer:	PARIC CORPORATION		
Owner:	WEBSTER UNIVERSITY		
Location:	WEBSTER GUOVES,MO 63119		
Dwn: ZZ	Date: 07/06/2016	Ckd: LJ	Date: 07/08/2016
Job No.	A16013	BAT:	DWG#: 867

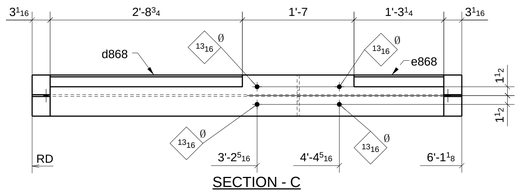

SECTION - C

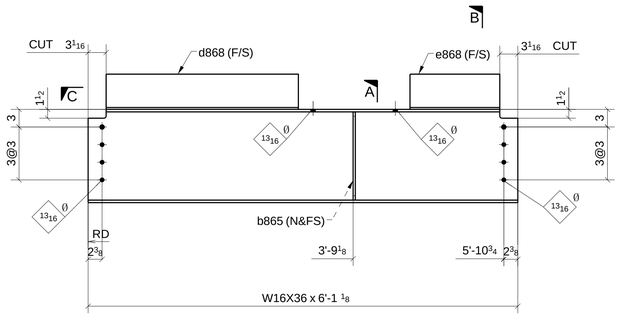

ONE - BEAM ~ 868A

LOCATION: (REF: E8B)
ONE @ 7-7.1/B.3-C

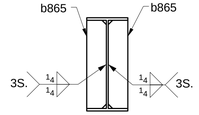

SECTION - A

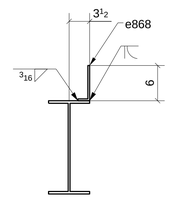

SECTION - B

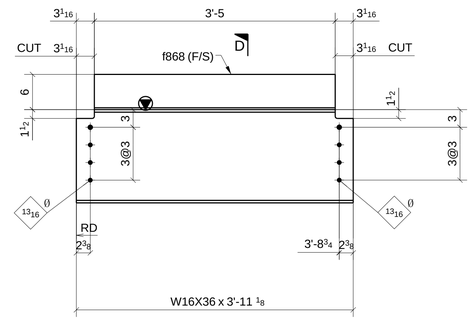

ONE - BEAM ~ 868B

LOCATION: (REF: E8B)
ONE @ 7-7.1/B.3-C

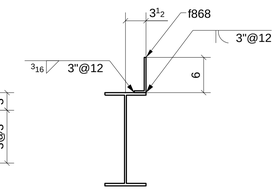

SECTION - D

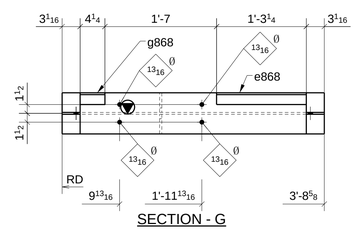

SECTION - G

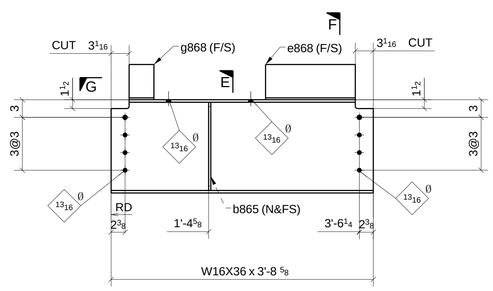

ONE - BEAM ~ 868C

LOCATION: (REF: E8B)
ONE @ 7-7.1/B.3-C

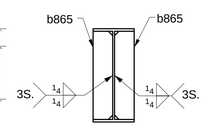

SECTION - E

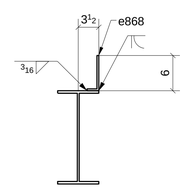

SECTION - F

SHOP BOLT IN SLOTTED HOLE
NEED "HAND TIGHTEN"

MATERIAL LIST

QTY	MARK	DESCRIPTION	LENGTH	MATERIAL	NOTES
1	868A	W16X36	6'-1 1/8"	A992	
2	b865	PL3/8"X3 3/8"	1'-3"	A36	
1	d868	BPL5/16"*8"	2'-8 3/4"	A36	
1	e868	BPL5/16"*8"	1'-3 1/4"	A36	
1	868B	W16X36	3'-11 1/8"	A992	
1	f868	BPL5/16"*8"	3'-5"	A36	
1	868C	W16X36	3'-8 5/8"	A992	
2	b865	PL3/8"X3 3/8"	1'-3"	A36	
1	e868	BPL5/16"*8"	1'-3 1/4"	A36	
1	g868	BPL5/16"*8"	0'-4 1/4"	A36	

Romac By: Checked By:
Beamline By: Checked By:

A FOR APPROVAL 07/08/16

Sequence: 8 Ref. E-Plans: –
Material: A992 U.N.O. Edge Dist.: 1 1/2" U.N.O.
Holes: 13/16"DIA. Bolts: NOTED
Cleaning: NONE
Paint: NO
DFT: COLOR:

ATLAS IRON WORKS
ST. LOUIS, MO.

Project: WEBSTER UNIVERSITY INTERDISCIPLINARY SCIENCE BUILDING
Customer: PARIC CORPORATION
Owner: WEBSTER UNIVERSITY
Location: WEBSTER GUOVES,MO 63119
Dwn: ZZ Date: 07/06/2016 Ckd: LJ Date: 07/08/2016
Job No. A16013 BAT: DWG#: 868

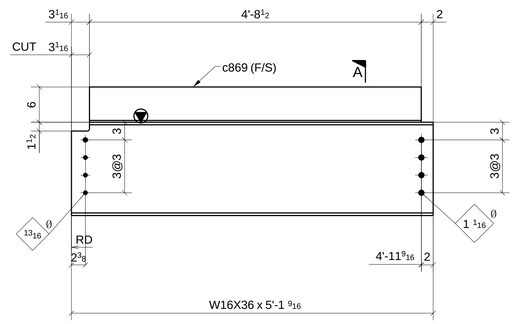

ONE - BEAM ~ 869A

LOCATION: (REF: E8B)
ONE @ 7-7.1/B.3-C

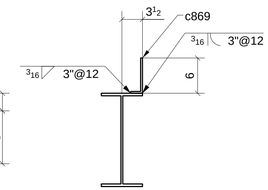

SECTION - A

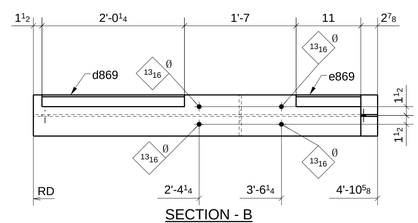

SECTION - B

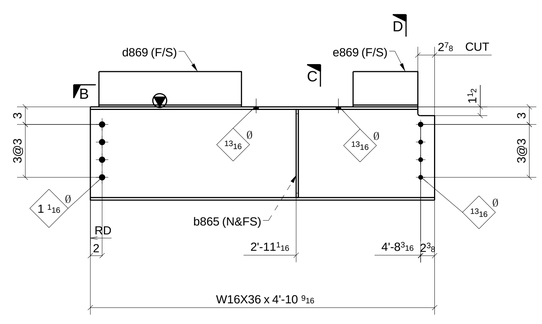

ONE - BEAM ~ 869B

LOCATION: (REF: E8B)
ONE @ 7-7.1/C-C.3

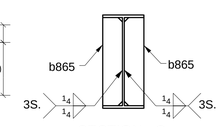

SECTION - C

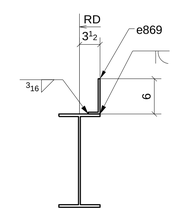

SECTION - D

SHOP BOLT IN SLOTTED HOLE
NEED "HAND TIGHTEN"

MATERIAL LIST

QTY	MARK	DESCRIPTION	LENGTH	MATERIAL	NOTES
1	869A	W16X36	5'-1 9/16"	A992	
1	c869	BPL5/16"*8"	4'-8 1/2"	A36	
1	869B	W16X36	4'-10 5/8"	A992	
2	b865	PL3/8"X3 3/8"	1'-3"	A36	
1	d869	BPL5/16"*8"	2'-0 1/4"	A36	
1	p985	BPL5/16"*8"	0'-11"	A36	

Romac By: Checked By:

Beamline By: Checked By:

A	FOR APPROVAL	07/08/16

Sequence: 8 Ref. E-Plans: --
Material: A992 U.N.O. Edge Dist.: 1 1/2" U.N.O.
Holes: 13/16"DIA. Bolts: NOTED
Cleaning: NONE
Paint: NO
DFT: COLOR:

ATLAS IRON WORKS
ST. LOUIS, MO.

Project: WEBSTER UNIVERSITY INTERDISCIPLINARY SCIENCE BUILDING
Customer: PARIC CORPORATION
Owner: WEBSTER UNIVERSITY
Location: WEBSTER GUOVES,MO 63119
Dwn: ZZ Date: 07/06/2016 Ckd: LJ Date: 07/08/2016
Job No. A16013 BAT: DWG#: 869

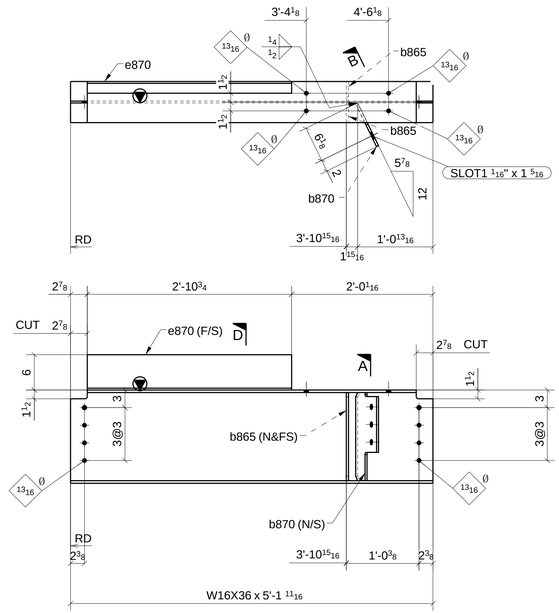

ONE - BEAM ~ 870A

LOCATION: (REF: E8B)
ONE @ 7-7.1/C-D

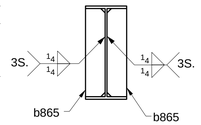

SECTION - A

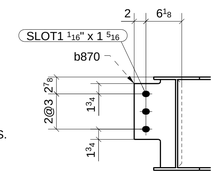

SECTION - B

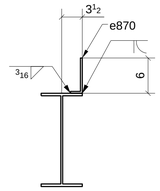

SECTION - D

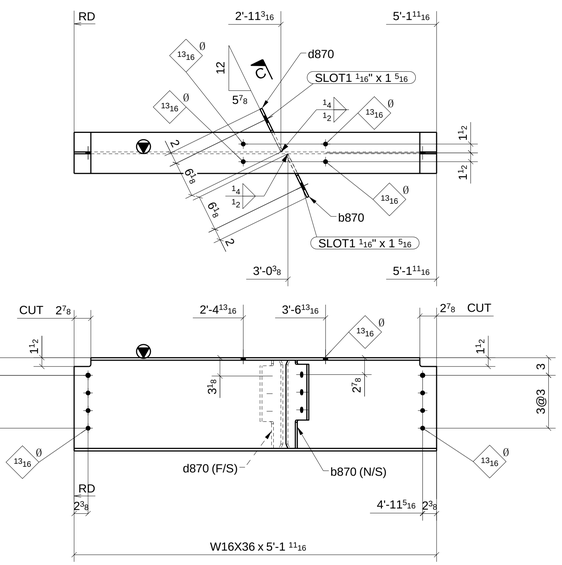

ONE - BEAM ~ 870B

LOCATION: (REF: E8B)
ONE @ 7.1-8/C.3-D

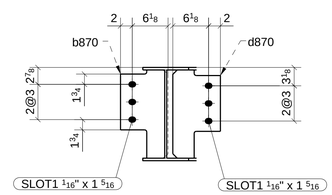

SECTION - C

SHOP BOLT IN SLOTTED HOLE
NEED "HAND TIGHTEN"

FOR APPROVAL

MATERIAL LIST

QTY	MARK	DESCRIPTION	LENGTH	MATERIAL	NOTES
1	870A	W16X36	5'-1 11/16"	A992	
2	b865	PL3/8"X3 3/8"	1'-3"	A36	
1	b870	PL3/8"X8 1/8"	1'-3"	A36	
1	e870	BPL5/16"*8"	2'-10 3/4"	A36	
1	870B	W16X36	5'-1 11/16"	A992	
1	b870	PL3/8"X8 1/8"	1'-3"	A36	
1	d870	PL3/8"X8 1/8"	1'-3"	A36	

Romac By: Checked By:
Beamline By: Checked By:

A	FOR APPROVAL	07/08/16

Sequence: 8 Ref. E-Plans: –
Material: A992 U.N.O. Edge Dist.: 1 1/2" U.N.O.
Holes: 13/16"DIA. Bolts: NOTED
Cleaning: NONE
Paint: NO
DFT: COLOR:

ATLAS IRON WORKS
ST. LOUIS, MO.

Project: WEBSTER UNIVERSITY INTERDISCIPLINARY SCIENCE BUILDING
Customer: PARIC CORPORATION
Owner: WEBSTER UNIVERSITY
Location: WEBSTER GUOVES,MO 63119
Dwn: ZZ Date: 07/06/2016 Ckd: LJ Date: 07/08/2016
Job No. A16013 BAT: DWG#: 870

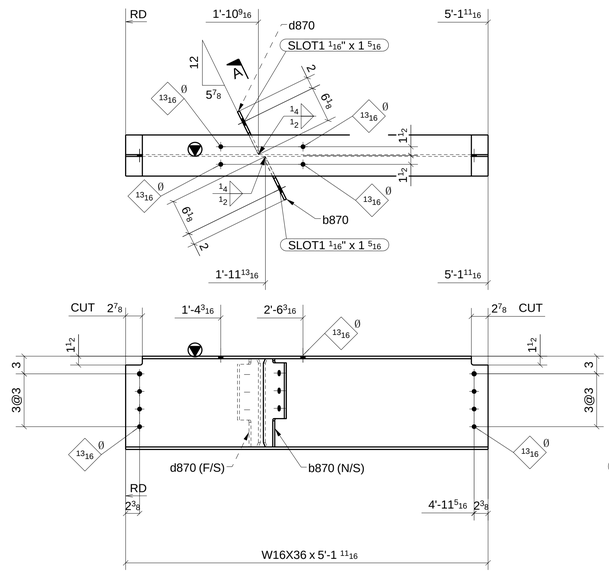

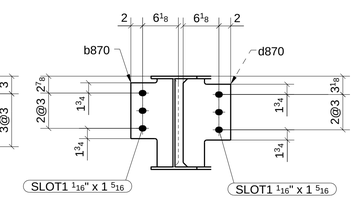

SECTION - A

ONE - BEAM ~ 871A

LOCATION:
ONE @ 7.1-8/C.3-D

(REF: E8B)

SHOP BOLT IN SLOTTED HOLE
NEED "HAND TIGHTEN"

MATERIAL LIST

QTY	MARK	DESCRIPTION	LENGTH	MATERIAL	NOTES
1	871A	W16X36	5'-1 11/16"	A992	
1	b870	PL3/8"X8 1/8"	1'-3"	A36	
1	d870	PL3/8"X8 1/8"	1'-3"	A36	

Romac By: Checked By:

Beamline By: Checked By:

A FOR APPROVAL 07/08/16

Sequence: 8 Ref. E-Plans: –

Material: A992 U.N.O. Edge Dist.: 1 1/2" U.N.O.

Holes: 13/16"DIA. Bolts: NOTED

Cleaning: NONE

Paint: NO

DFT: COLOR:

ATLAS IRON WORKS
ST. LOUIS, MO.

Project: WEBSTER UNIVERSITY INTERDISCIPLINARY SCIENCE BUILDING

Customer: PARIC CORPORATION

Owner: WEBSTER UNIVERSITY

Location: WEBSTER GUOVES,MO 63119

Dwn: ZZ Date: 07/06/2016 Ckd: LJ Date: 07/08/2016

Job No. A16013 BAT: DWG#: 871

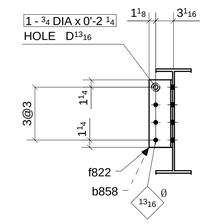

SECTION - A

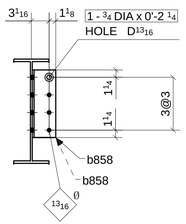

SECTION - B

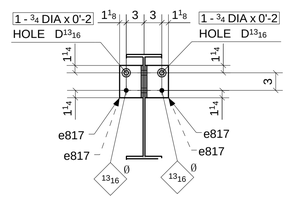

SECTION - C

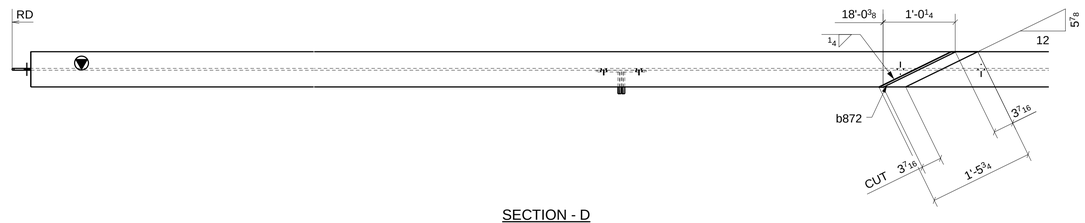

SECTION - D

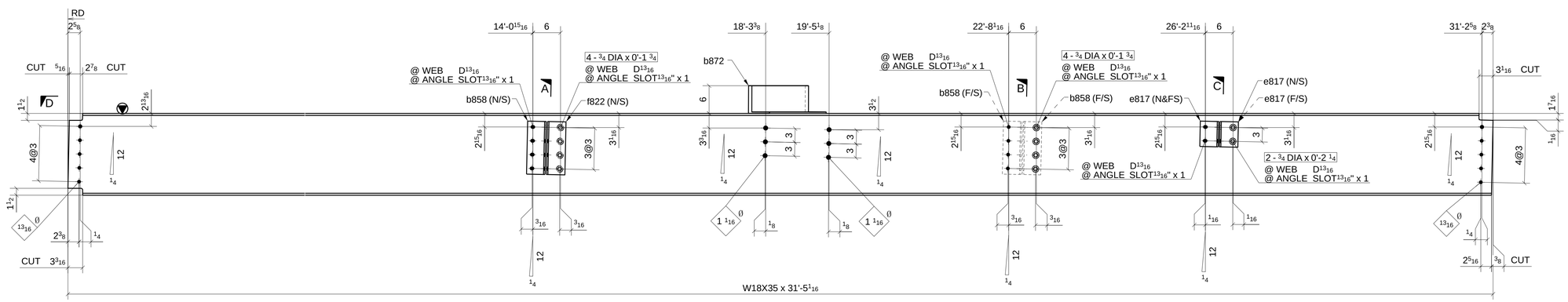

ONE - BEAM ~ 872A

LOCATION: (REF: E8B)

ONE @ 7-8/C-3-D

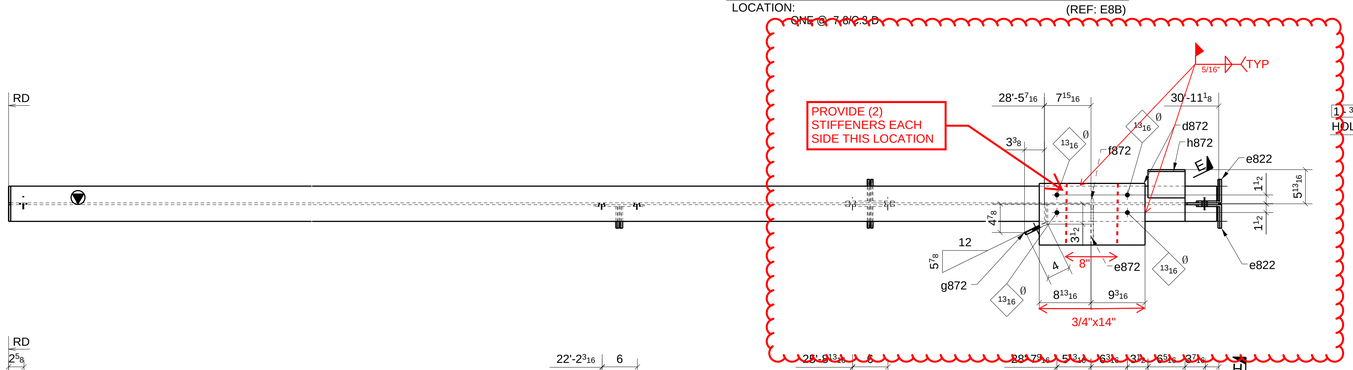

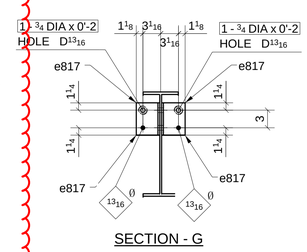

SECTION - G

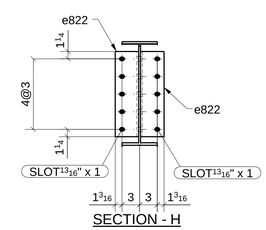

SECTION - H

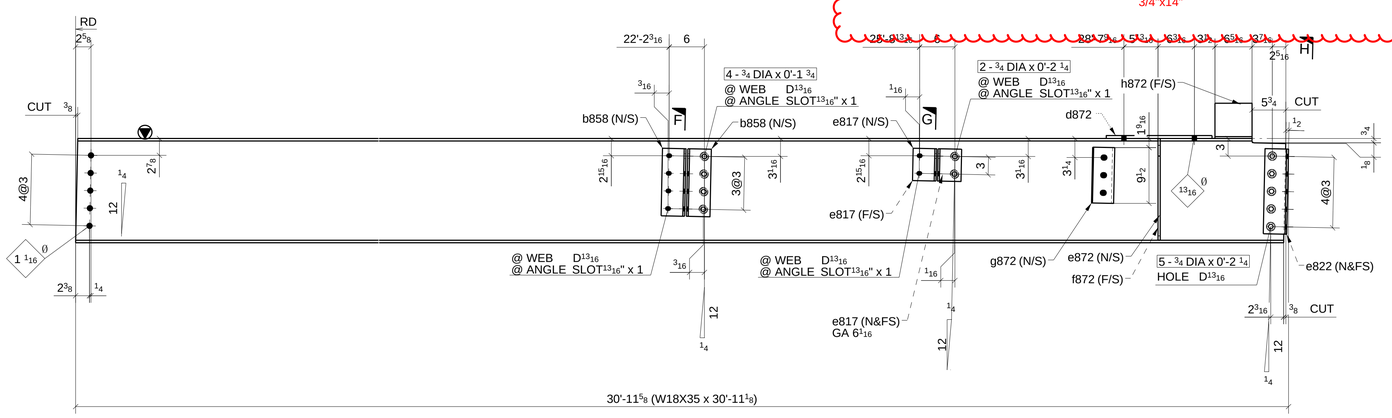

ONE - BEAM ~ 872B

LOCATION: (REF: E8B)

ONE @ 7-8/D

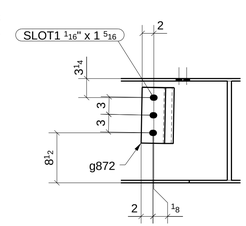

SECTION - E

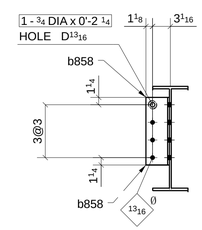

SECTION - F

SHOP BOLT IN SLOTTED HOLE
NEED "HAND TIGHTEN"

MATERIAL LIST

QTY	MARK	DESCRIPTION	LENGTH	MATERIAL	NOTES
1	872A	W18X35	31'-5 1/16"	A992	
3	b858	L4X4X5/16	0'-11 1/2"	A36	
1	b872	BPL5/16"*8"	1'-5 3/4"	A36	
4	e817	L4X4X5/16	0'-5 1/2"	A36	
1	f822	L4X4X5/16	0'-11 1/2"	A36	
2		3/4" DIA. W/N&W	0'-2 1/4"	A325N TC	
2		3/4" DIA. W/N&W	0'-2"	A325N TC	
2		3/4" DIA. W/N&W	0'-2 1/4"	A325N TC	
8		3/4" DIA. W/N&W	0'-1 3/4"	A325N TC	
1	872B	W18X35	30'-11 1/8"	A992	
2	b858	L4X4X5/16	0'-11 1/2"	A36	
1	d872	PL1/2"X10 1/2"	1'-6"	A36	
4	e817	L4X4X5/16	0'-5 1/2"	A36	
2	e822	L4X4X5/16	1'-2 1/2"	A36	
1	e872	PL3/8"X6 7/8"	1'-5 5/16"	A36	
1	f872	PL3/8"X2 3/4"	1'-4 7/8"	A36	
1	g872	BPL3/8"X7 5/16"	0'-9 1/2"	A36	
1	h872	BPL5/16"*10"13/16	0'-6 5/16"	A36	
4		3/4" DIA. W/N&W	0'-1 3/4"	A325N TC	
1		3/4" DIA. W/N&W	0'-2 1/4"	A325N TC	
2		3/4" DIA. W/N&W	0'-2 1/4"	A325N TC	
5		3/4" DIA. W/N&W	0'-2 1/4"	A325N TC	
2		3/4" DIA. W/N&W	0'-2"	A325N TC	

Romac By: Checked By:

Beamline By: Checked By:

ATLAS IRON WORKS
ST. LOUIS, MO.

A	FOR APPROVAL		07/08/16
Sequence:	8	Ref. E-Plans:	–
Material:	A992 U.N.O.	Edge Dist.:	1 1/2" U.N.O.
Holes:	13/16"DIA.	Bolts:	NOTED
Cleaning:	NONE		
Paint:	NO		
DFT:		COLOR:	

Project: WEBSTER UNIVERSITY INTERDISCIPLINARY SCIENCE BUILDING
Customer: PARIC CORPORATION
Owner: WEBSTER UNIVERSITY
Location: WEBSTER GUOVES,MO 63119
Dwn: ZZ Date: 07/06/2016 Ckd: LJ Date: 07/08/2016
Job No. A16013 BAT: DWG#: 872

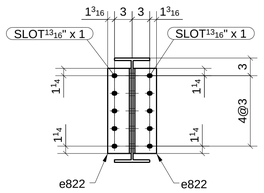

SECTION - A

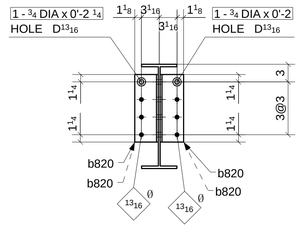

SECTION - B

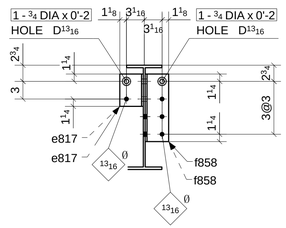

SECTION - C

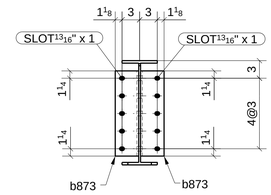

SECTION - D

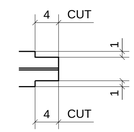

SECTION - E

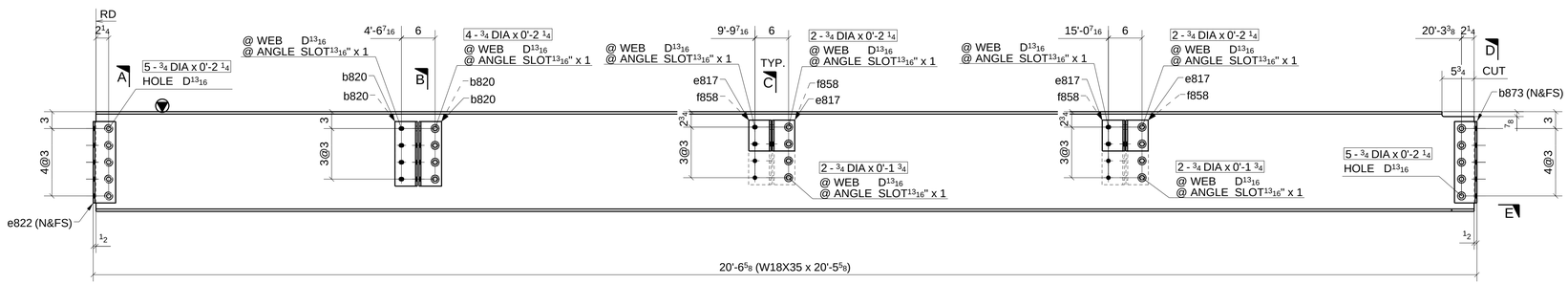

ONE - BEAM ~ 873A

LOCATION: (REF: E8B)
ONE @ 6/C-D

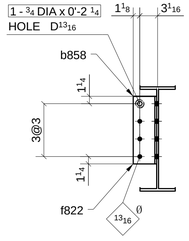

SECTION - F

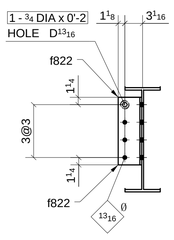

SECTION - G

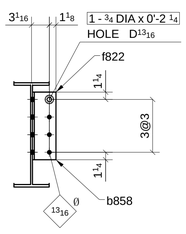

SECTION - H

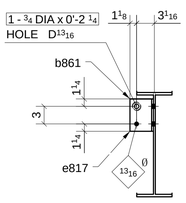

SECTION - I

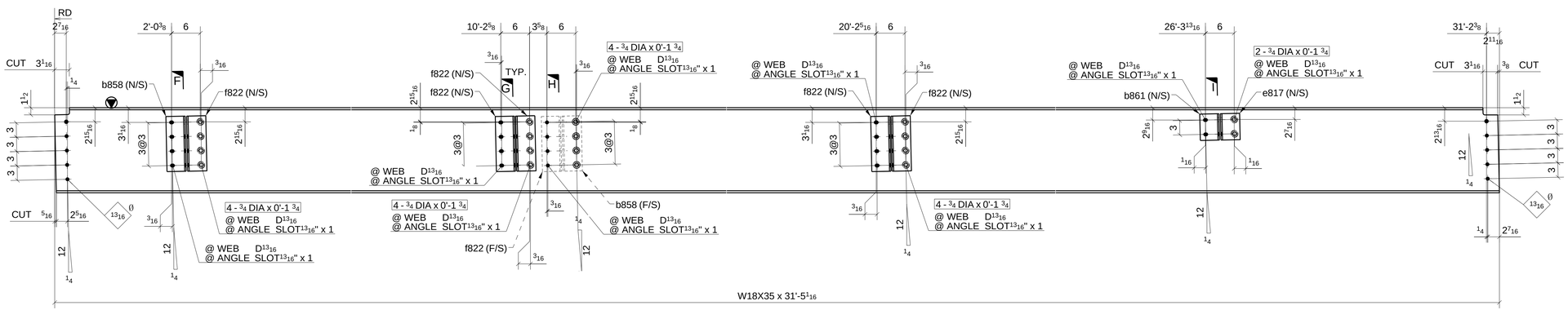

ONE - BEAM ~ 873B

LOCATION: (REF: E8B)
ONE @ 5-6/B.3-C

SHOP BOLT IN SLOTTED HOLE
NEED "HAND TIGHTEN"

MATERIAL LIST

QTY	MARK	DESCRIPTION	LENGTH	MATERIAL	NOTES
1	873A	W18X35	20'-5 5/8"	A992	
4	b820	L4X4X5/16	0'-11 1/2"	A36	
2	b873	L4X4X5/16	1'-2 1/2"	A36	
4	e817	L4X4X5/16	0'-5 1/2"	A36	
2	e822	L4X4X5/16	1'-2 1/2"	A36	
4	f858	L4X4X5/16	0'-11 1/2"	A36	
1		3/4" DIA. W/N&W	0'-2 1/4"	A325N_TC	
4		3/4" DIA. W/N&W	0'-2 1/4"	A325N_TC	
4		3/4" DIA. W/N&W	0'-1 3/4"	A325N_TC	
4		3/4" DIA. W/N&W	0'-2 1/4"	A325N_TC	
5		3/4" DIA. W/N&W	0'-2"	A325N_TC	
10		3/4" DIA. W/N&W	0'-2 1/4"	A325N_TC	
1	873B	W18X35	31'-5 1/16"	A992	
2	b858	L4X4X5/16	0'-11 1/2"	A36	
1	b861	L4X4X5/16	0'-5 1/2"	A36	
1	e817	L4X4X5/16	0'-5 1/2"	A36	
6	f822	L4X4X5/16	0'-11 1/2"	A36	
2		3/4" DIA. W/N&W	0'-1 3/4"	A325N_TC	
2		3/4" DIA. W/N&W	0'-2"	A325N_TC	
3		3/4" DIA. W/N&W	0'-2 1/4"	A325N_TC	
16		3/4" DIA. W/N&W	0'-1 3/4"	A325N_TC	

Romac By: Checked By:
Beamline By: Checked By:

ATLAS IRON WORKS
ST. LOUIS, MO.

A	FOR APPROVAL		07/08/16
Sequence:	8	Ref. E-Plans:	–
Material:	A992 U.N.O.	Edge Dist.:	1 1/2" U.N.O.
Holes:	13/16"DIA.	Bolts:	NOTED
Cleaning:	NONE		
Paint:	NO		
DFT:		COLOR:	

Project: WEBSTER UNIVERSITY INTERDISCIPLINARY SCIENCE BUILDING
Customer: PARIC CORPORATION
Owner: WEBSTER UNIVERSITY
Location: WEBSTER GUOVES,MO 63119
Dwn: ZZ Date: 07/06/2016 Ckd: LJ Date: 07/08/2016
Job No. A16013 BAT: DWG#: 873

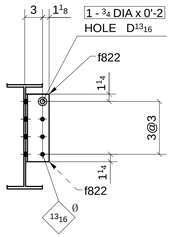

SECTION - A

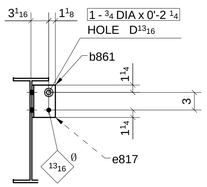

SECTION - B

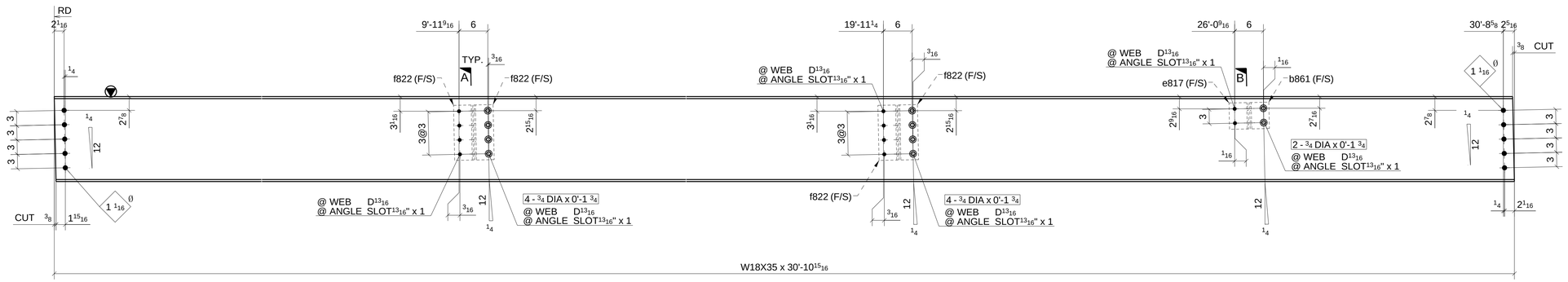

ONE - BEAM ~ 874A

LOCATION: (REF: E8B)

ONE @ 5-6/B.3

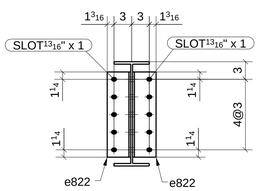

SECTION - C

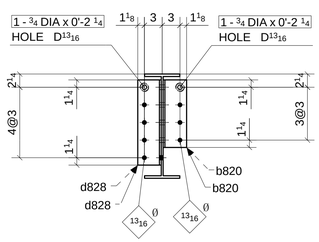

SECTION - D

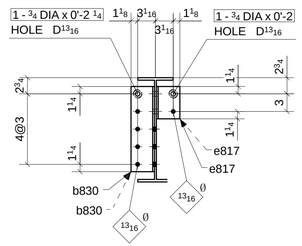

SECTION - E

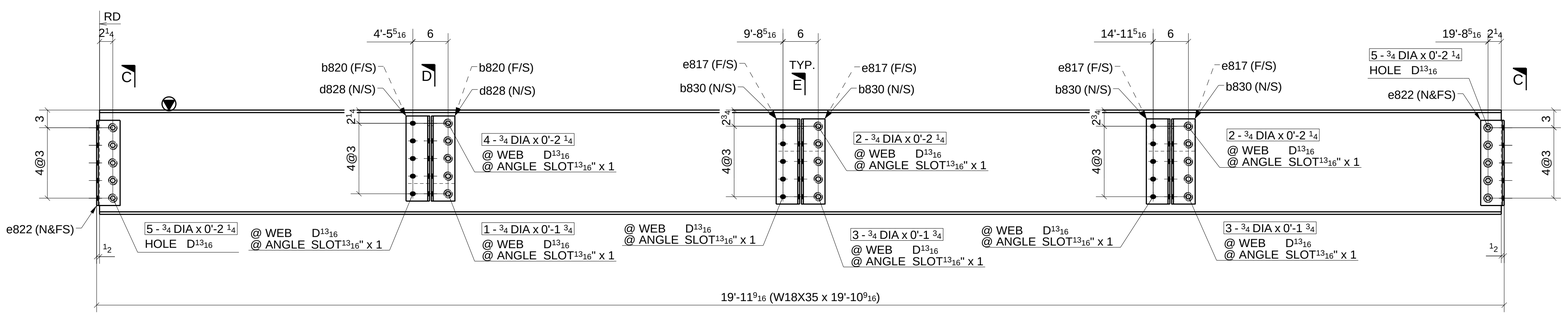

ONE - BEAM ~ 874B

LOCATION: (REF: E8B)

ONE @ 7/C-D

SHOP BOLT IN SLOTTED HOLE
NEED "HAND TIGHTEN"

MATERIAL LIST

QTY	MARK	DESCRIPTION	LENGTH	MATERIAL	NOTES
1	874A	W18X35	30'-10 15/16"	A992	
1	b861	L4X4X5/16	0'-5 1/2"	A36	
1	e817	L4X4X5/16	0'-5 1/2"	A36	
4	f822	L4X4X5/16	0'-11 1/2"	A36	
2		3/4" DIA. W/N&W	0'-1 3/4"	A325N_TC	
1		3/4" DIA. W/N&W	0'-2 1/4"	A325N_TC	
2		3/4" DIA. W/N&W	0'-2"	A325N_TC	
8		3/4" DIA. W/N&W	0'-1 3/4"	A325N_TC	
1	874B	W18X35	19'-10 9/16"	A992	
2	b820	L4X4X5/16	0'-11 1/2"	A36	
4	b830	L4X4X5/16	1'-2 1/2"	A36	
2	d828	L4X4X5/16	1'-2 1/2"	A36	
4	e817	L4X4X5/16	0'-5 1/2"	A36	
4	e822	L4X4X5/16	1'-2 1/2"	A36	
1		3/4" DIA. W/N&W	0'-1 3/4"	A325N_TC	
4		3/4" DIA. W/N&W	0'-2 1/4"	A325N_TC	
2		3/4" DIA. W/N&W	0'-2"	A325N_TC	
4		3/4" DIA. W/N&W	0'-2 1/4"	A325N_TC	
4		3/4" DIA. W/N&W	0'-2 1/4"	A325N_TC	
6		3/4" DIA. W/N&W	0'-1 3/4"	A325N_TC	
10		3/4" DIA. W/N&W	0'-2 1/4"	A325N_TC	

Romac By: Checked By:

Beamline By: Checked By:

ATLAS IRON WORKS
ST. LOUIS, MO.

A FOR APPROVAL 07/08/16

Sequence: 8 Ref. E-Plans: –

Material: A992 U.N.O. Edge Dist.: 1 1/2" U.N.O.

Holes: 13/16"DIA. Bolts: NOTED

Cleaning: NONE

Paint: NO

DFT: COLOR:

Project: WEBSTER UNIVERSITY INTERDISCIPLINARY SCIENCE BUILDING

Customer: PARIC CORPORATION

Owner: WEBSTER UNIVERSITY

Location: WEBSTER GUOVES,MO 63119

Dwn: ZZ Date: 07/06/2016 Ckd: LJ Date: 07/08/2016

Job No. A16013 BAT: DWG#: 874

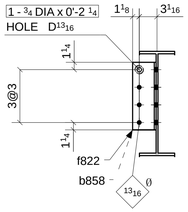

SECTION - A

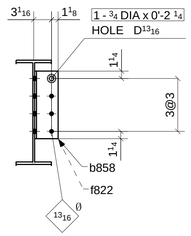

SECTION - B

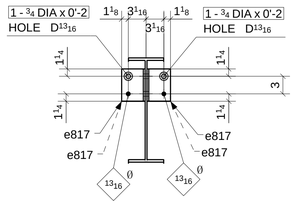

SECTION - C

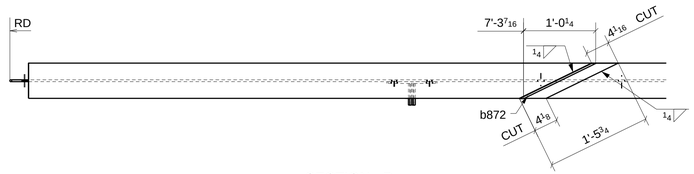

SECTION - D

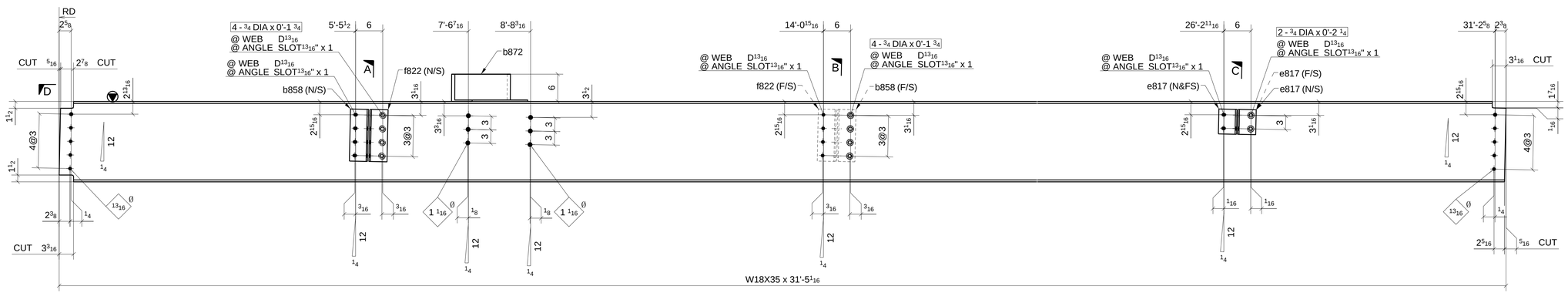

ONE - BEAM ~ 875A

LOCATION: (REF: E8B)
ONE @ 7-8/C.3-D

SHOP BOLT IN SLOTTED HOLE
NEED "HAND TIGHTEN"

FOR APPROVAL

MATERIAL LIST

QTY	MARK	DESCRIPTION	LENGTH	MATERIAL	NOTES
1	875A	W18X35	31'-5 1/16"	A992	
2	b858	L4X4X5/16	0'-11 1/2"	A36	
1	b872	BPL5/16"*8"	1'-5 3/4"	A36	
4	e817	L4X4X5/16	0'-5 1/2"	A36	
2	f822	L4X4X5/16	0'-11 1/2"	A36	
2		3/4" DIA. W/N&W	0'-2 1/4"	A325N TC	
2		3/4" DIA. W/N&W	0'-2"	A325N TC	
2		3/4" DIA. W/N&W	0'-2 1/4"	A325N TC	
8		3/4" DIA. W/N&W	0'-1 3/4"	A325N TC	

Romac By: Checked By:
Beamline By: Checked By:

ATLAS IRON WORKS
ST. LOUIS, MO.

A	FOR APPROVAL		07/08/16
Sequence:	8	Ref. E-Plans:	–
Material:	A992 U.N.O.	Edge Dist.:	1 1/2" U.N.O.
Holes:	13/16"DIA.	Bolts:	NOTED
Cleaning:	NONE		
Paint:	NO		
DFT:		COLOR:	

Project: WEBSTER UNIVERSITY INTERDISCIPLINARY SCIENCE BUILDING
Customer: PARIC CORPORATION
Owner: WEBSTER UNIVERSITY
Location: WEBSTER GUOVES,MO 63119
Dwn: ZZ Date: 07/06/2016 Ckd: LJ Date: 07/08/2016
Job No. A16013 BAT: DWG#: 875

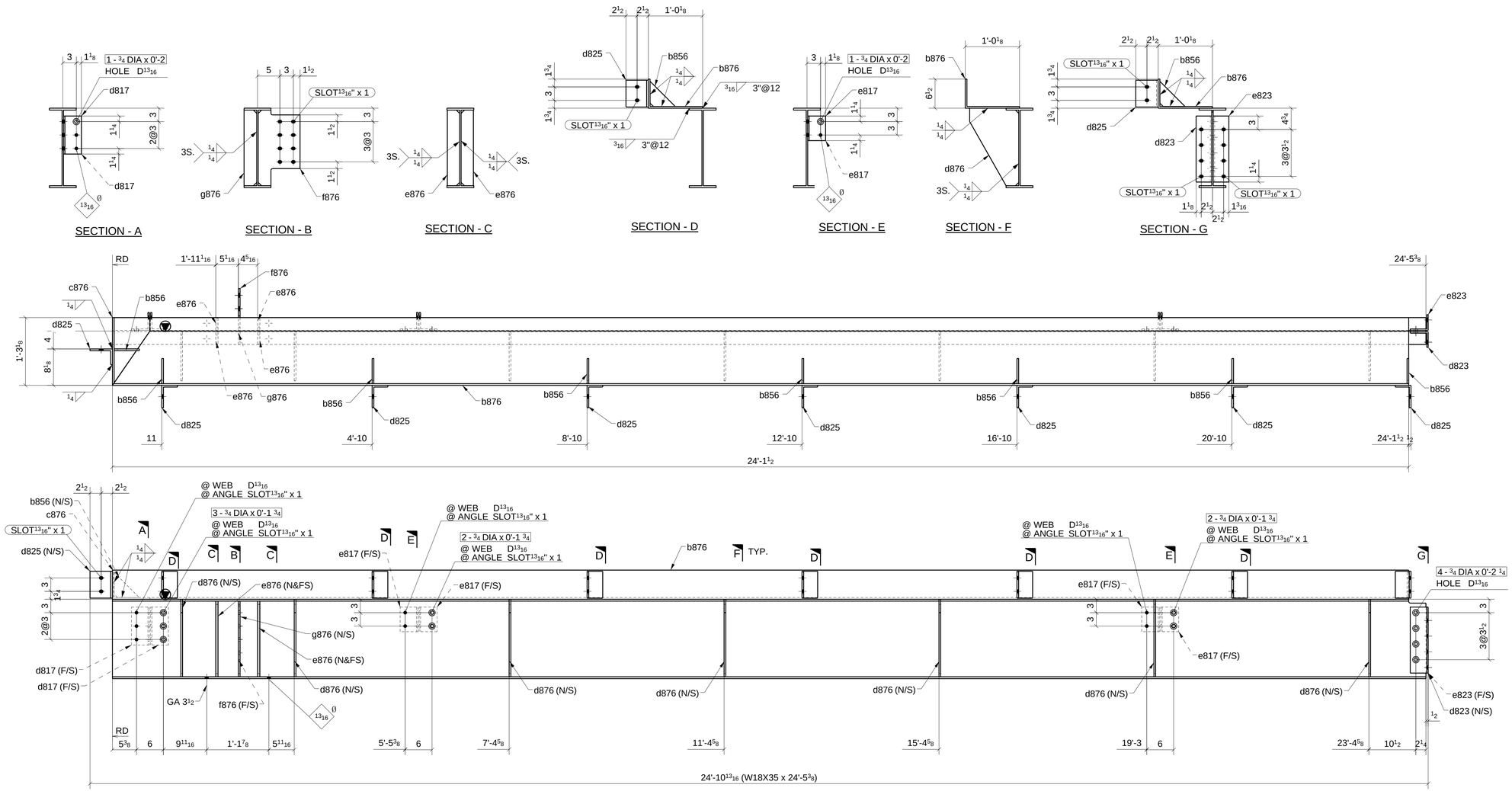

ONE - BEAM ~ 876A

LOCATION: (REF: E8B)
ONE @ 7-8/A.6

SHOP BOLT IN SLOTTED HOLE
NEED "HAND TIGHTEN"

MATERIAL LIST

QTY	MARK	DESCRIPTION	LENGTH	MATERIAL	NOTES
1	876A	W18X35	24'-5 3/8"	A992	
8	b856	PL3/8"X5 5/8"	0'-5 5/8"	A36	
1	b876	BPL3/8"X18 5/8"	24'-1 1/2"	A36	
1	c876	BPL3/8"X14 7/8"	1'-3 1/8"	A36	
2	d817	L4X4X5/16	0'-8 1/2"	A36	
1	d823	L4X3-1/2X5/16	1'-2 3/4"	A36	
8	d825	L5X3-1/2X3/8	0'-6"	A36	
7	d876	PL3/8"X11"	1'-5 5/16"	A36	
4	e817	L4X4X5/16	0'-5 1/2"	A36	
1	e823	L4X3-1/2X5/16	1'-2 3/4"	A36	
4	e876	PL1/2"X2 3/4"	1'-4 7/8"	A36	
1	f876	PL3/8"X9 3/8"	1'-4 7/8"	A36	
1	g876	PL3/8"X2 13/16"	1'-4 7/8"	A36	
3		3/4" DIA. W/N&W	0'-1 3/4"	A325N_TC	
4		3/4" DIA. W/N&W	0'-2 1/4"	A325N_TC	
3		3/4" DIA. W/N&W	0'-2"	A325N_TC	
4		3/4" DIA. W/N&W	0'-1 3/4"	A325N_TC	

Romac By: Checked By:
Beamline By: Checked By:

A	FOR APPROVAL	07/08/16

Sequence: 8 Ref. E-Plans: –
Material: A992 U.N.O. Edge Dist.: 1 1/2" U.N.O.
Holes: 13/16"DIA. Bolts: NOTED
Cleaning: NONE
Paint: NO
DFT: COLOR:

ATLAS IRON WORKS
ST. LOUIS, MO.

Project: WEBSTER UNIVERSITY INTERDISCIPLINARY SCIENCE BUILDING
Customer: PARIC CORPORATION
Owner: WEBSTER UNIVERSITY
Location: WEBSTER GUOVES,MO 63119
Dwn: ZZ Date: 07/06/2016 Ckd: LJ Date: 07/08/2016
Job No. A16013 BAT: DWG#: 876

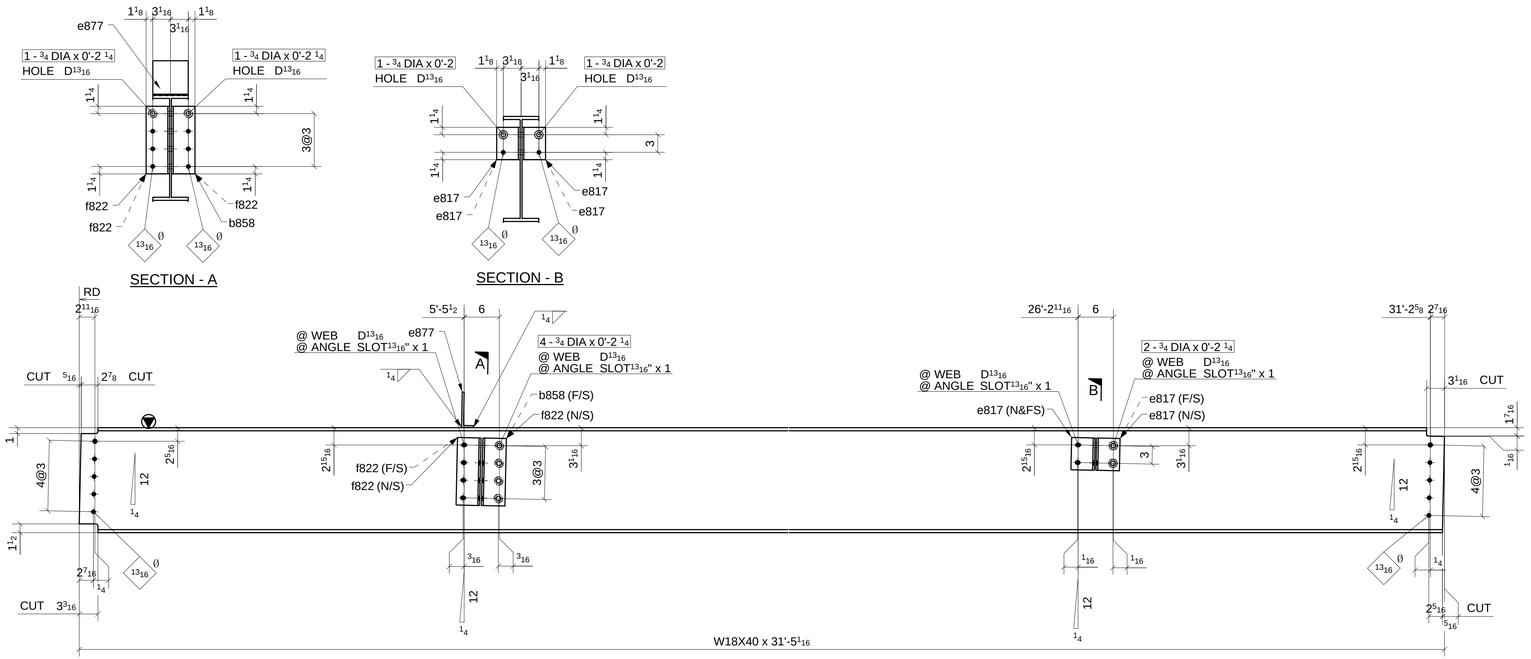

ONE - BEAM ~ 877A

LOCATION: (REF: E8B)
ONE @ 7-8/C-C.3

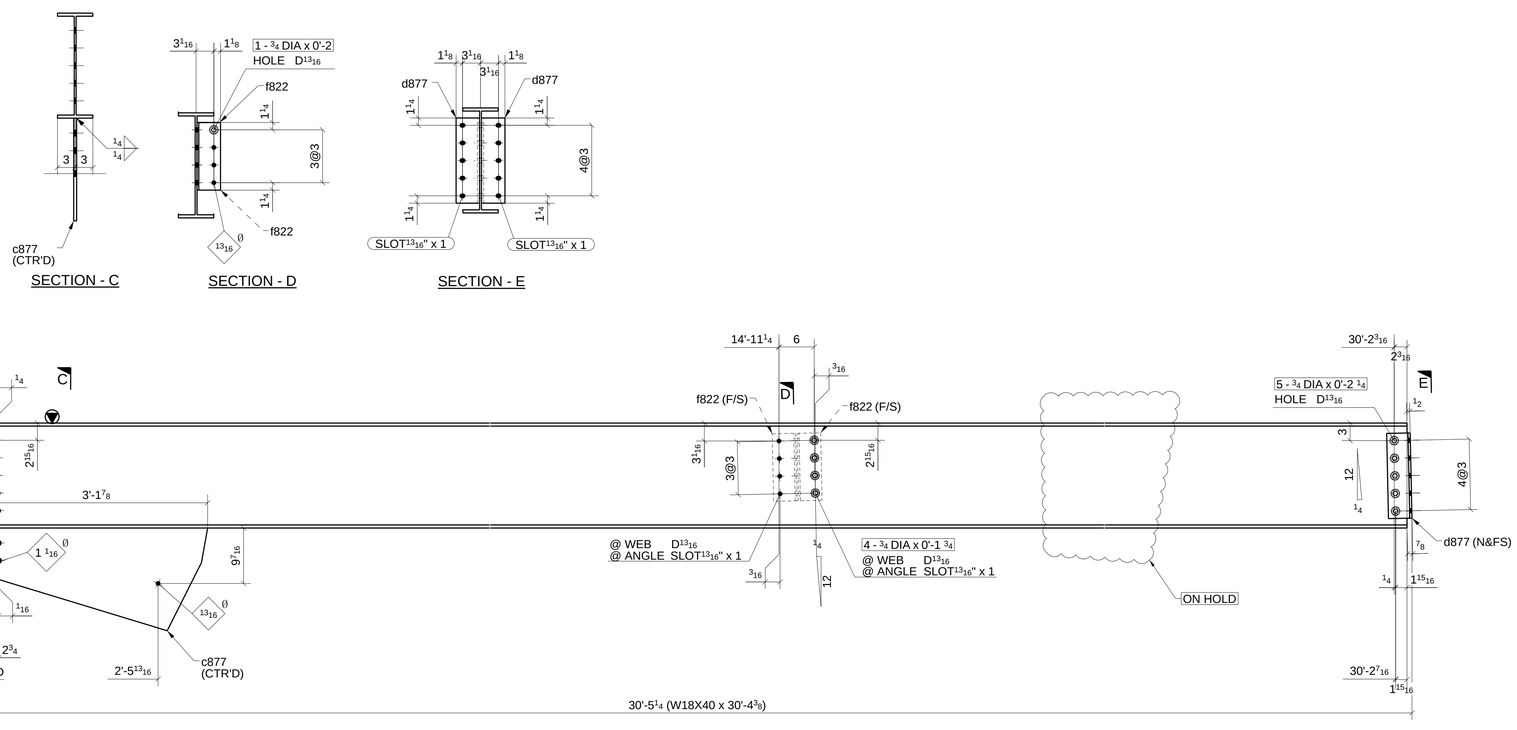

ONE - BEAM ~ 877B

LOCATION: (REF: E8B)
ONE @ 5-6/D

SHOP BOLT IN SLOTTED HOLE
NEED "HAND TIGHTEN"

MATERIAL LIST

QTY	MARK	DESCRIPTION	LENGTH	MATERIAL	NOTES
1	877A	W18X40	31'-5 1/16"	A992	
1	b858	L4X4X5/16	0'-11 1/2"	A36	
4	e817	L4X4X5/16	0'-5 1/2"	A36	
1	e877	BPL5/16"*8"	0'-6"	A36	
3	f822	L4X4X5/16	0'-11 1/2"	A36	
2		3/4" DIA. W/N&W	0'-2 1/4"	A325N TC	
4		3/4" DIA. W/N&W	0'-2 1/4"	A325N TC	
2		3/4" DIA. W/N&W	0'-2"	A325N TC	
2		3/4" DIA. W/N&W	0'-2 1/4"	A325N TC	
1	877B	W18X40	30'-4 3/8"	A992	
1	c877	PL1/2"X17 1/2"	3'-1 7/8"	A572-GR.50	
2	d877	L4X4X3/8	1'-2 1/2"	A36	
2	f822	L4X4X5/16	0'-11 1/2"	A36	
4		3/4" DIA. W/N&W	0'-1 3/4"	A325N TC	
1		3/4" DIA. W/N&W	0'-2"	A325N TC	
5		3/4" DIA. W/N&W	0'-2 1/4"	A325N TC	

ON HOLD

A	FOR APPROVAL	07/08/16

Sequence: 8 Ref. E-Plans: –
Material: A992 U.N.O. Edge Dist.: 1 1/2" U.N.O.
Holes: 13/16"DIA. Bolts: NOTED
Cleaning: NONE
Paint: NO
DFT: COLOR:

Romac By: Checked By:
Beamline By: Checked By:

ATLAS IRON WORKS
ST. LOUIS, MO.

Project: WEBSTER UNIVERSITY INTERDISCIPLINARY SCIENCE BUILDING
Customer: PARIC CORPORATION
Owner: WEBSTER UNIVERSITY
Location: WEBSTER GUOVES,MO 63119
Dwn: ZZ Date: 07/06/2016 Ckd: LJ Date: 07/08/2016
Job No. A16013 BAT: DWG#: 877

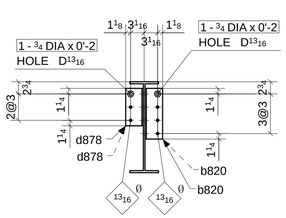

SECTION - A

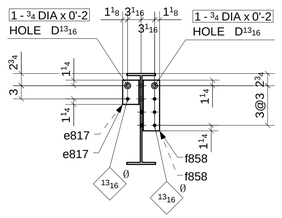

SECTION - B

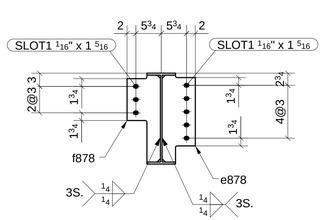

SECTION - C

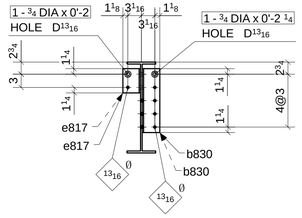

SECTION - D

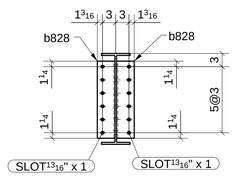

SECTION - E

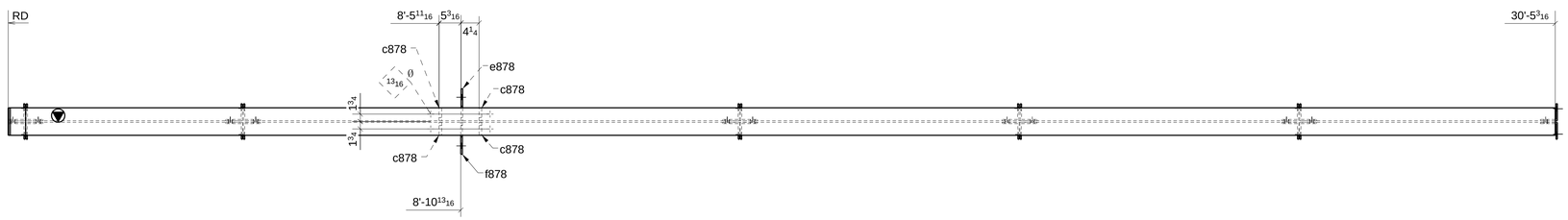

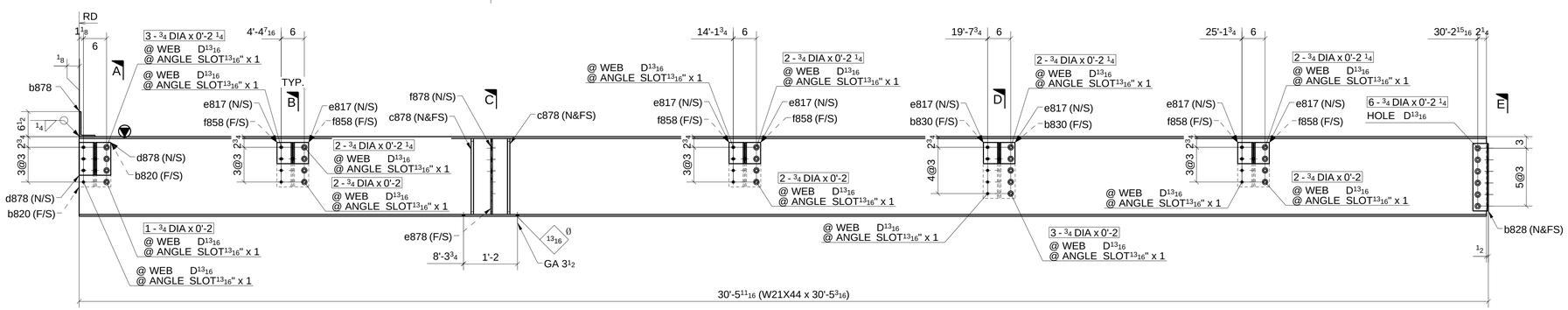

ONE - BEAM ~ 878A

LOCATION: (REF: E8B)
ONE @ 6/B-C

SHOP BOLT IN SLOTTED HOLE
NEED "HAND TIGHTEN"

MATERIAL LIST

QTY	MARK	DESCRIPTION	LENGTH	MATERIAL	NOTES
1	878A	W21X44	30'-5 3/16"	A992	
2	b820	L4X4X5/16	0'-11 1/2"	A36	
2	b828	L4X4X5/16	1'-5 1/2"	A36	
2	b830	L4X4X5/16	1'-2 1/2"	A36	
1	b878	BPL3/8"X6 1/2"	0'-10 1/2"	A36	
4	c878	PL5/8"X3"	1'-7 3/4"	A36	
2	d878	L4X4X5/16	0'-8 1/2"	A36	
8	e817	L4X4X5/16	0'-5 1/2"	A36	
1	e878	PL3/8"X7 9/16"	1'-7 3/4"	A36	
6	f858	L4X4X5/16	0'-11 1/2"	A36	
1	f878	PL3/8"X7 9/16"	1'-7 3/4"	A36	
3		3/4" DIA. W/N&W	0'-2"	A325N_TC	
3		3/4" DIA. W/N&W	0'-2 1/4"	A325N_TC	
6		3/4" DIA. W/N&W	0'-2 1/4"	A325N_TC	
1		3/4" DIA. W/N&W	0'-2 1/4"	A325N_TC	
6		3/4" DIA. W/N&W	0'-2"	A325N_TC	
8		3/4" DIA. W/N&W	0'-2 1/4"	A325N_TC	
10		3/4" DIA. W/N&W	0'-2"	A325N_TC	

Romac By: Checked By:
Beamline By: Checked By:

A FOR APPROVAL 07/08/16

Sequence: 8 Ref. E-Plans: –
Material: A992 U.N.O. Edge Dist.: 1 1/2" U.N.O.
Holes: 13/16"DIA. Bolts: NOTED
Cleaning: NONE
Paint: NO
DFT: COLOR:

ATLAS IRON WORKS
ST. LOUIS, MO.

Project: WEBSTER UNIVERSITY INTERDISCIPLINARY SCIENCE BUILDING
Customer: PARIC CORPORATION
Owner: WEBSTER UNIVERSITY
Location: WEBSTER GUOVES,MO 63119
Dwn: ZZ Date: 07/06/2016 Ckd: LJ Date: 07/08/2016
Job No. A16013 BAT: DWG#: 878

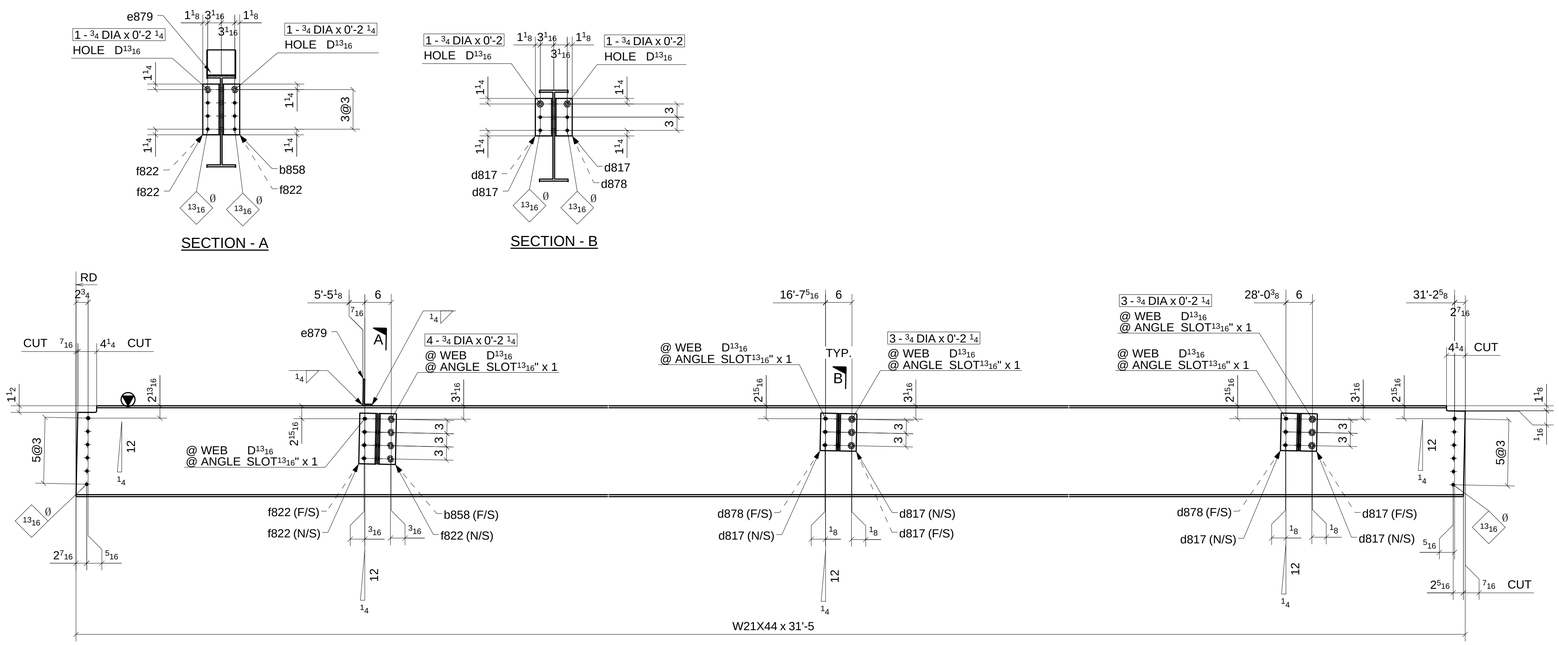

ONE - BEAM ~ 879A

LOCATION: (REF: E8B)
ONE @ 7-8/B.3-C

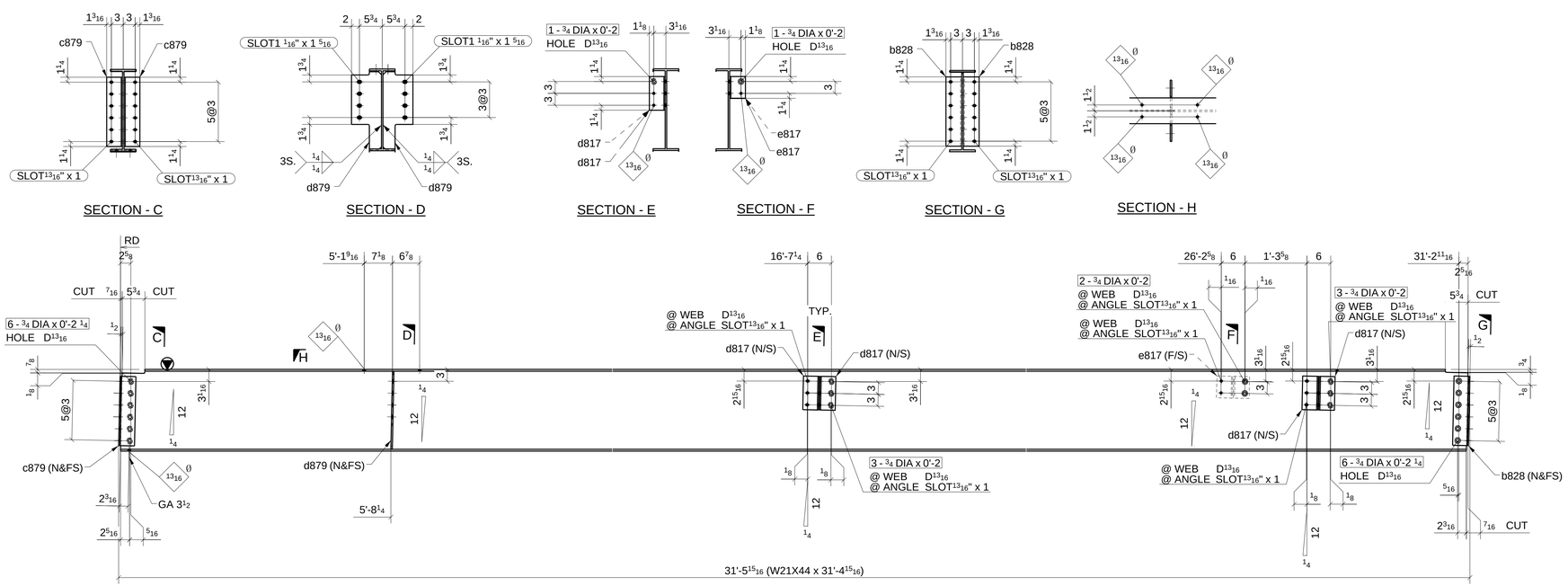

ONE - BEAM ~ 879B

LOCATION: (REF: E8B)
ONE @ 7-8/C

SHOP BOLT IN SLOTTED HOLE
NEED "HAND TIGHTEN"

MATERIAL LIST

QTY	MARK	DESCRIPTION	LENGTH	MATERIAL	NOTES
1	879A	W21X44	31'-5"	A992	
1	b858	L4X4X5/16	0'-11 1/2"	A36	
6	d817	L4X4X5/16	0'-8 1/2"	A36	
2	d878	L4X4X5/16	0'-8 1/2"	A36	
1	e879	BPL5/16"*8"	0'-6 1/2"	A36	
3	f822	L4X4X5/16	0'-11 1/2"	A36	
4		3/4" DIA. W/N&W	0'-2 1/4"	A325N TC	
2		3/4" DIA. W/N&W	0'-2 1/4"	A325N TC	
4		3/4" DIA. W/N&W	0'-2"	A325N TC	
6		3/4" DIA. W/N&W	0'-2 1/4"	A325N TC	
1	879B	W21X44	31'-4 15/16"	A992	
2	b828	L4X4X5/16	1'-5 1/2"	A36	
2	c879	L4X4X5/16	1'-5 1/2"	A36	
4	d817	L4X4X5/16	0'-8 1/2"	A36	
2	d879	PL3/8"X7 9/16"	1'-7 3/4"	A36	
2	e817	L4X4X5/16	0'-5 1/2"	A36	
2		3/4" DIA. W/N&W	0'-2"	A325N TC	
3		3/4" DIA. W/N&W	0'-2"	A325N TC	
6		3/4" DIA. W/N&W	0'-2"	A325N TC	
12		3/4" DIA. W/N&W	0'-2 1/4"	A325N TC	

Romac By: Checked By:
Beamline By: Checked By:

ATLAS IRON WORKS
ST. LOUIS, MO.

A	FOR APPROVAL		07/08/16
Sequence:	8	Ref. E-Plans:	–
Material:	A992 U.N.O.	Edge Dist.:	1 1/2" U.N.O.
Holes:	13/16"DIA.	Bolts:	NOTED
Cleaning:	NONE		
Paint:	NO		
DFT:		COLOR:	

Project: WEBSTER UNIVERSITY INTERDISCIPLINARY SCIENCE BUILDING
Customer: PARIC CORPORATION
Owner: WEBSTER UNIVERSITY
Location: WEBSTER GUOVES,MO 63119
Dwn: ZZ Date: 07/06/2016 Ckd: LJ Date: 07/08/2016
Job No. A16013 BAT: DWG#: 879

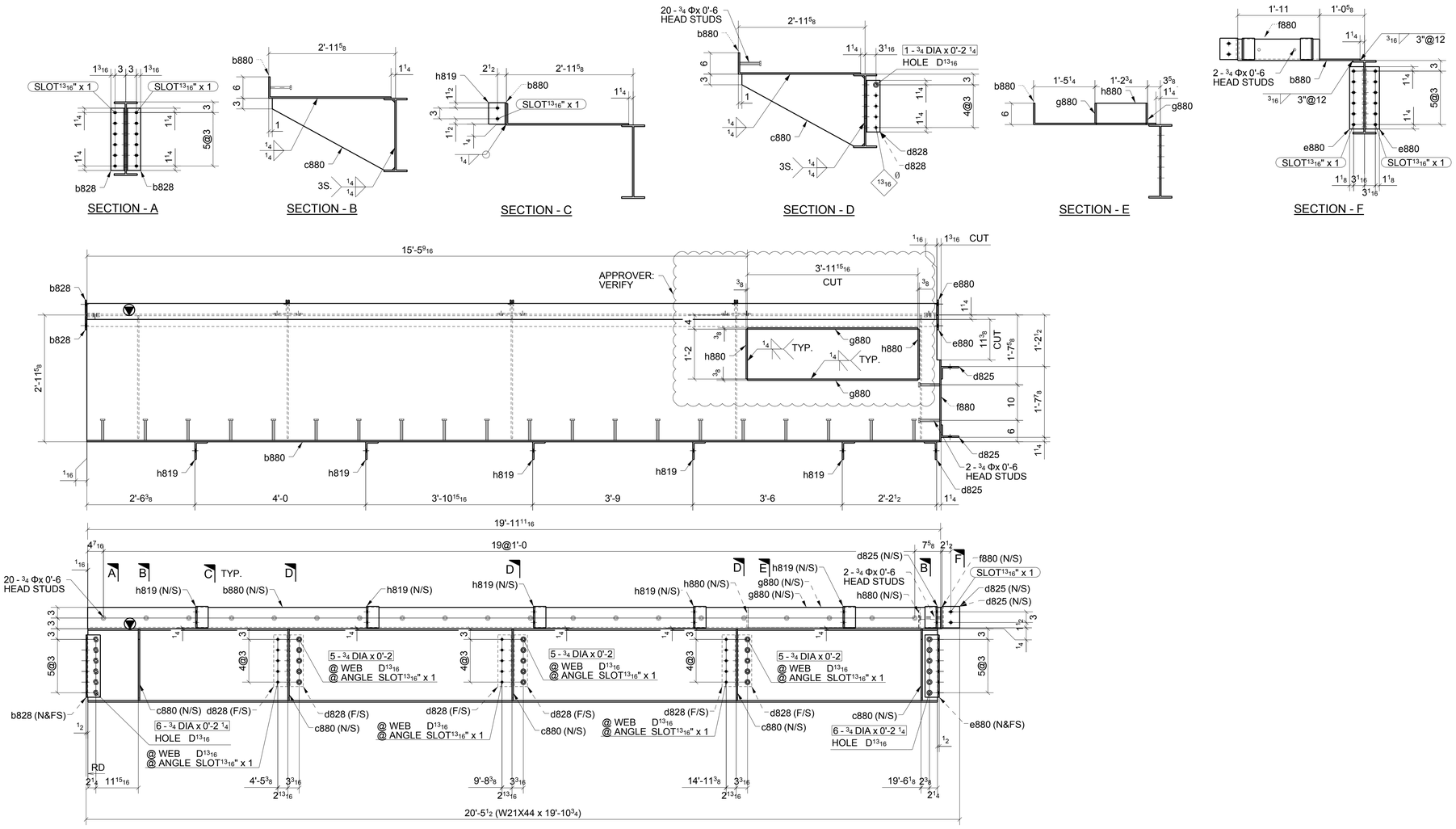

ONE - BEAM ~ 880A

LOCATION: ONE @ 8/C-D (REF: E8B)

SHOP BOLT IN SLOTTED HOLE
NEED "HAND TIGHTEN"

FOR APPROVAL

MATERIAL LIST

QTY	MARK	DESCRIPTION	LENGTH	MATERIAL	NOTES
1	880A	W21X44	19'-10 3/4"	A992	
2	b828	L4X4X5/16	1'-5 1/2"	A36	
1	b880	BPL3/8"X40 3/8"	19'-11 11/1	A36	
5	c880	PL3/8"X20 3/16"	2'-10 7/16"	A36	
3	d825	L5X3-1/2X3/8	0'-6"	A36	
6	d828	L4X4X5/16	1'-2 1/2"	A36	
2	e880	L4X4X3/8	1'-5 1/2"	A36	
1	f880	PL3/8"X6"	1'-11"	A36	
2	g880	PL3/8"X5 5/8"	3'-11 15/16	A36	
5	h819	L5X3-1/2X3/8	0'-6"	A36	
2	h880	PL3/8"X5 5/8"	1'-2"	A36	
3		3/4" DIA. W/N&W	0'-2 1/4"	A325N_TC	
12		3/4" DIA. W/N&W	0'-2 1/4"	A325N_TC	
15		3/4" DIA. W/N&W	0'-2"	A325N_TC	
20		3/4" STUD	0'-6"		
2		3/4" STUD	0'-6"		

Romac By: _____ Checked By: _____

Beamline By: _____ Checked By: _____

ATLAS IRON WORKS
ST. LOUIS, MO.

A	FOR APPROVAL 07/08/16
Sequence:	8
Ref. E-Plans:	–
Material:	A992 U.N.O.
Edge Dist.:	1 1/2" U.N.O.
Holes:	13/16"DIA.
Bolts:	NOTED
Cleaning:	NONE
Paint:	NO
DFT:	
COLOR:	

Project:	WEBSTER UNIVERSITY INTERDISCIPLINARY SCIENCE BUILDING
Customer:	PARIC CORPORATION
Owner:	WEBSTER UNIVERSITY
Location:	WEBSTER GUOVES,MO 63119
Dwn: ZZ	Date: 07/06/2016 Ckd: LJ Date: 07/08/2016
Job No.	A16013 BAT: DWG#: 880

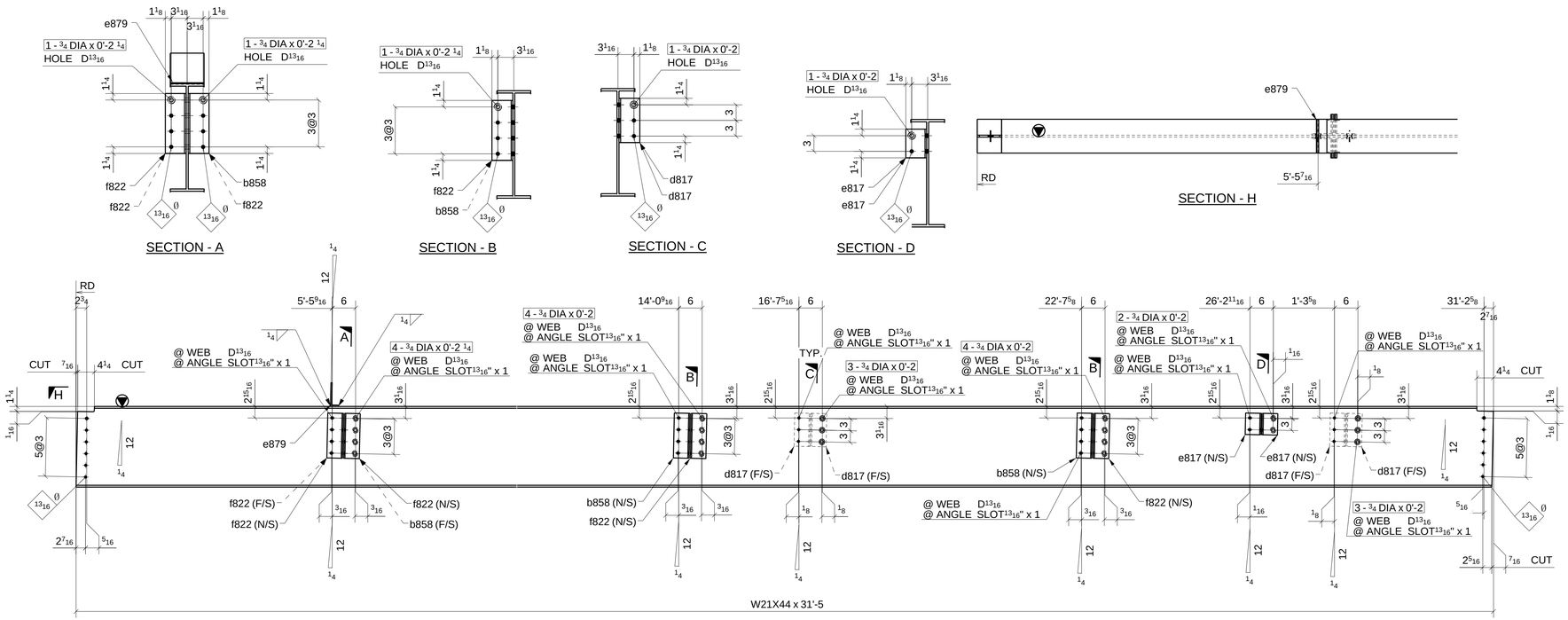

ONE - BEAM ~ 881A

LOCATION: (REF: E8B)
ONE @ 7-8/B-B.3

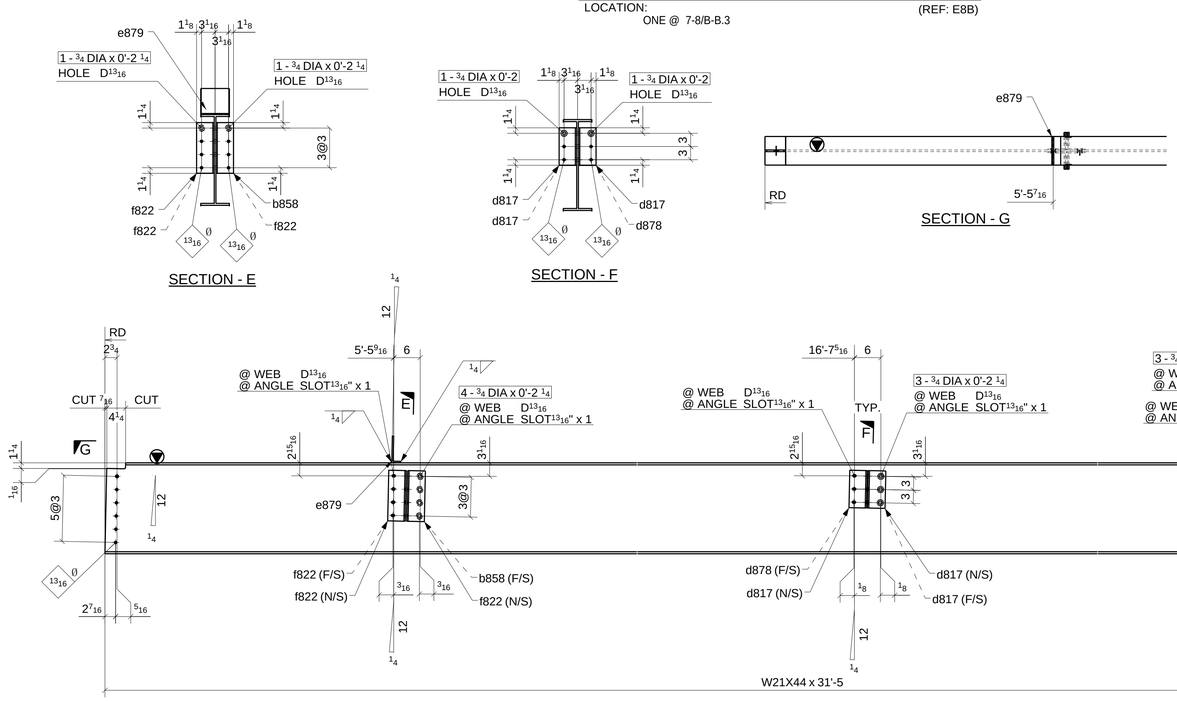

3 - BEAMS ~ 881B

LOCATION: (REF: E8B)
ONE @ 7-8/B.3-C
ONE @ 7-8/B.3-C
ONE @ 7-8/B.3-C

SHOP BOLT IN SLOTTED HOLE
NEED "HAND TIGHTEN"

MATERIAL LIST

QTY	MARK	DESCRIPTION	LENGTH	MATERIAL	NOTES
1	881A	W21X44	31'-5"	A992	
3	b858	L4X4X5/16	0'-11 1/2"	A36	
4	d817	L4X4X5/16	0'-8 1/2"	A36	
2	e817	L4X4X5/16	0'-5 1/2"	A36	
1	e879	BPL5/16"*8"	0'-6 1/2"	A36	
5	f822	L4X4X5/16	0'-11 1/2"	A36	
2		3/4" DIA. W/N&W	0'-2"	A325N TC	
4		3/4" DIA. W/N&W	0'-2 1/4"	A325N TC	
3		3/4" DIA. W/N&W	0'-2"	A325N TC	
4		3/4" DIA. W/N&W	0'-2 1/4"	A325N TC	
6		3/4" DIA. W/N&W	0'-2"	A325N TC	
8		3/4" DIA. W/N&W	0'-2"	A325N TC	
3	881B	W21X44	31'-5"	A992	
3	b858	L4X4X5/16	0'-11 1/2"	A36	
18	d817	L4X4X5/16	0'-8 1/2"	A36	
6	d878	L4X4X5/16	0'-8 1/2"	A36	
3	e879	BPL5/16"*8"	0'-6 1/2"	A36	
9	f822	L4X4X5/16	0'-11 1/2"	A36	
12		3/4" DIA. W/N&W	0'-2 1/4"	A325N TC	
6		3/4" DIA. W/N&W	0'-2 1/4"	A325N TC	
12		3/4" DIA. W/N&W	0'-2"	A325N TC	
18		3/4" DIA. W/N&W	0'-2 1/4"	A325N TC	

Romac By: Checked By:
Beamline By: Checked By:

A	FOR APPROVAL		07/08/16
Sequence:	8	Ref. E-Plans:	–
Material:	A992 U.N.O.	Edge Dist.:	1 1/2" U.N.O.
Holes:	13/16"DIA.	Bolts:	NOTED
Cleaning:	NONE		
Paint:	NO		
DFT:		COLOR:	

ATLAS IRON WORKS
ST. LOUIS, MO.

Project: WEBSTER UNIVERSITY INTERDISCIPLINARY SCIENCE BUILDING
Customer: PARIC CORPORATION
Owner: WEBSTER UNIVERSITY
Location: WEBSTER GUOVES,MO 63119
Dwn: ZZ Date: 07/06/2016 Ckd: LJ Date: 07/08/2016
Job No. A16013 BAT: DWG#: 881

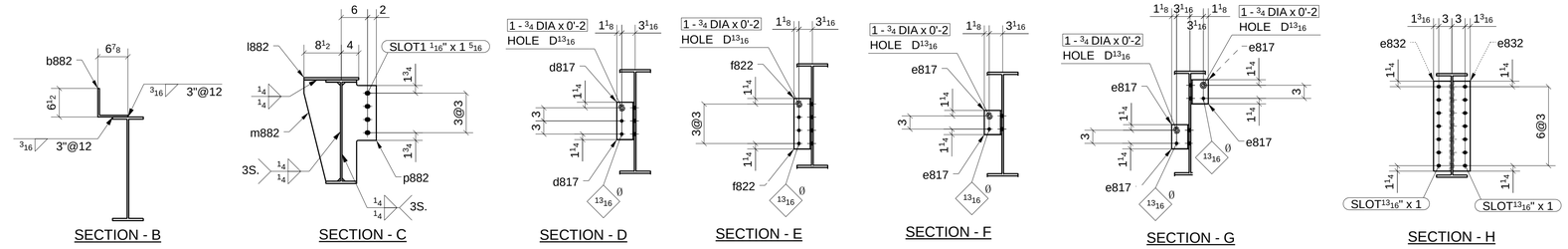

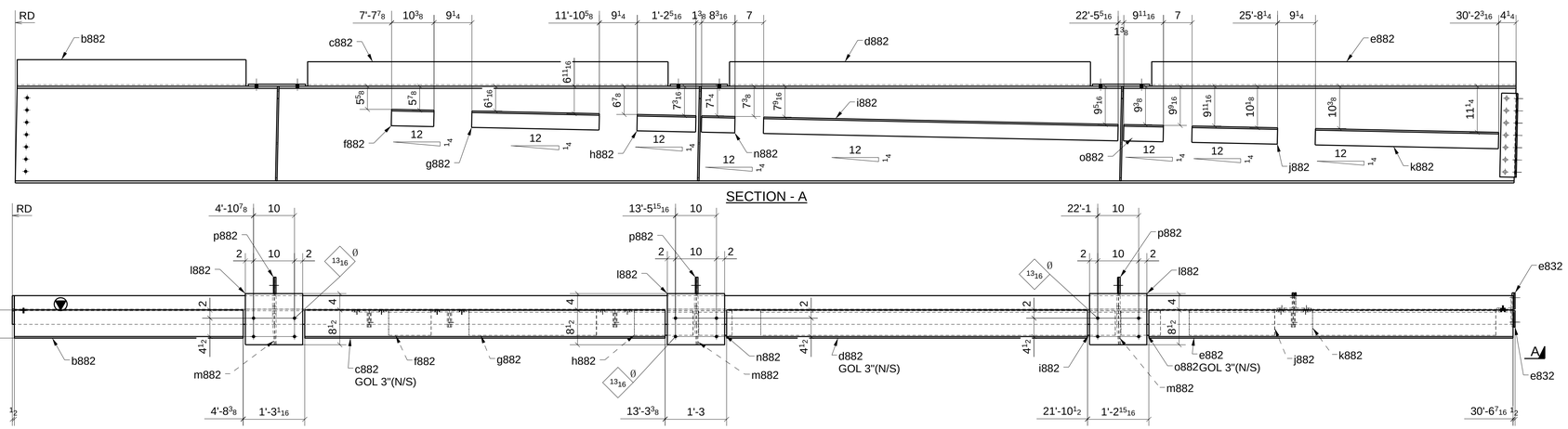

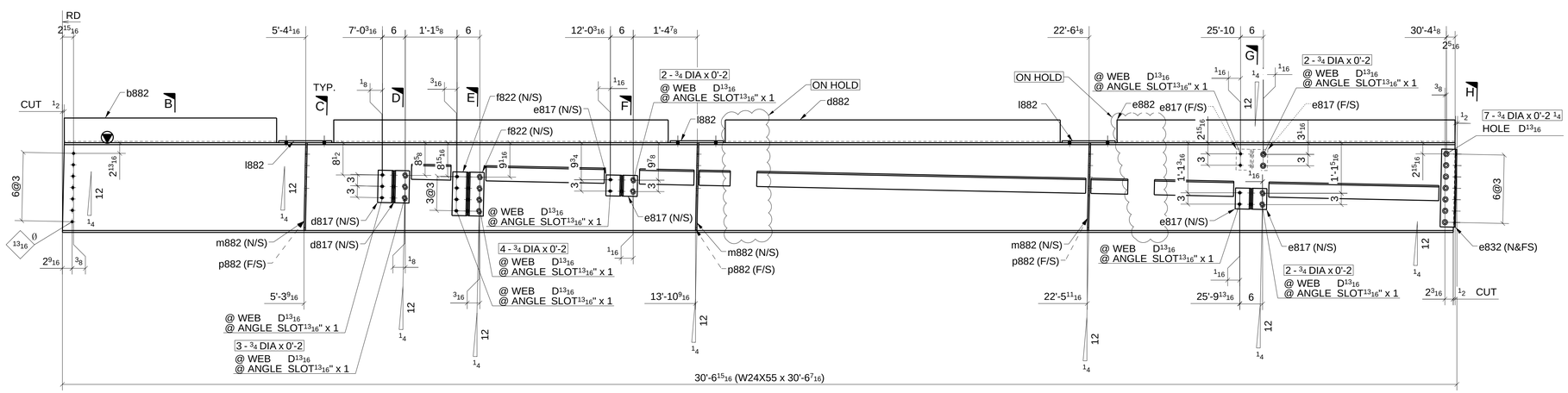

ONE - BEAM ~ 882A

LOCATION: (REF: E8B)
ONE @ 7-8/B

SHOP BOLT IN SLOTTED HOLE
NEED "HAND TIGHTEN"

ON HOLD

MATERIAL LIST

QTY	MARK	DESCRIPTION	LENGTH	MATERIAL	NOTES
1	882A	W24X55	30'-6 7/16"	A992	
1	b882	BPL3/8"X13 3/8"	4'-7 7/8"	A36	
1	c882	BPL3/8"X12 7/8"	7'-4"	A36	
2	d817	L4X4X5/16	0'-8 1/2"	A36	
1	d882	BPL3/8"X12 7/8"	7'-4 1/8"	A36	
6	e817	L4X4X5/16	0'-5 1/2"	A36	
2	e832	L4X4X5/16	1'-8 1/2"	A36	
1	e882	BPL3/8"X12 7/8"	7'-4 15/16"	A36	
2	f822	L4X4X5/16	0'-11 1/2"	A36	
1	f882	L6X4X3/8	0'-10 3/8"	A36	
1	g882	L6X4X3/8	2'-7 1/8"	A36	
1	h882	L6X4X3/8	1'-2 5/16"	A36	
1	i882	L6X4X3/8	7'-2 9/16"	A36	
1	j882	L6X4X3/8	1'-8 7/8"	A36	
1	k882	L6X4X3/8	3'-8 3/4"	A36	
3	l882	PL1/2"X12 1/2"	1'-2"	A36	
3	m882	PL3/8"X8 5/16"	1'-11 1/8"		
1	n882	L6X4X3/8	0'-8 3/16"	A36	
1	o882	L6X4X3/8	0'-9 11/16"	A36	
3	p882	PL3/8"X7 13/16"	1'-10 5/8"	A36	
4		3/4" DIA. W/N&W	0'-2"	A325N TC	
3		3/4" DIA. W/N&W	0'-2"	A325N TC	
7		3/4" DIA. W/N&W	0'-2 1/4"	A325N TC	
5		3/4" DIA. W/N&W	0'-2"	A325N TC	
6		3/4" DIA. W/N&W	0'-2"	A325N TC	

Romac By: Checked By:
Beamline By: Checked By:

A	FOR APPROVAL	07/08/16

Sequence: 8 Ref. E-Plans: --
Material: A992 U.N.O. Edge Dist.: 1 1/2" U.N.O.
Holes: 13/16"DIA. Bolts: NOTED
Cleaning: NONE
Paint: NO
DFT: COLOR:

ATLAS IRON WORKS
ST. LOUIS, MO.

Project: WEBSTER UNIVERSITY INTERDISCIPLINARY SCIENCE BUILDING
Customer: PARIC CORPORATION
Owner: WEBSTER UNIVERSITY
Location: WEBSTER GUOVES,MO 63119
Dwn: ZZ Date: 07/06/2016 Ckd: LJ Date: 07/08/2016
Job No. A16013 BAT: DWG#: 882

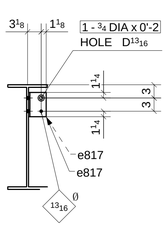

SECTION - A

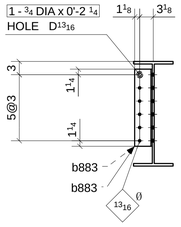

SECTION - B

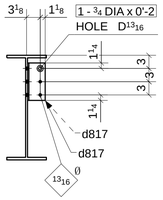

SECTION - C

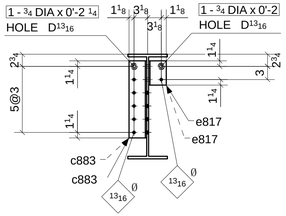

SECTION - D

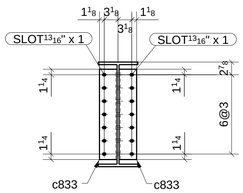

SECTION - E

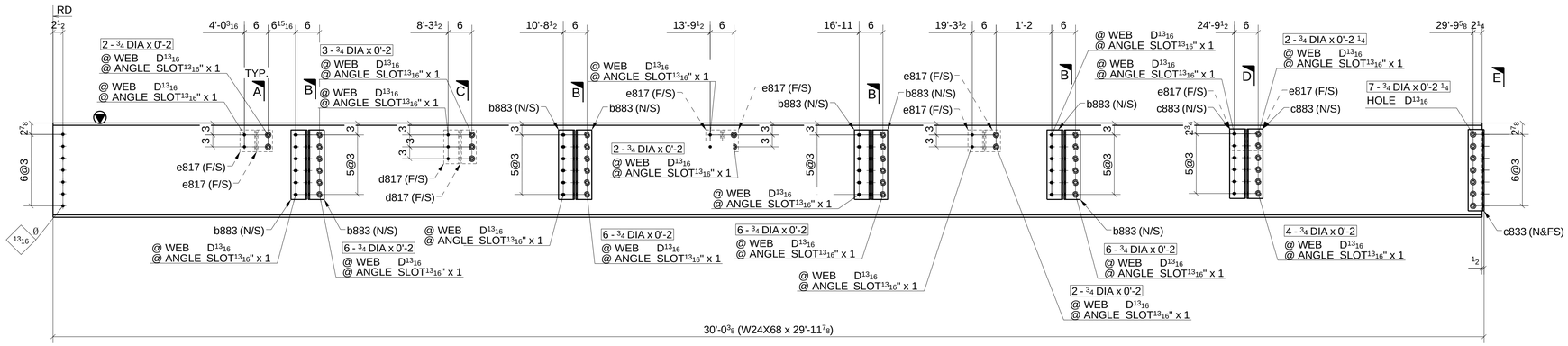

ONE - BEAM ~ 883A

LOCATION: (REF: E8B)
ONE @ 7/B-C

SHOP BOLT IN SLOTTED HOLE
NEED "HAND TIGHTEN"

MATERIAL LIST

QTY	MARK	DESCRIPTION	LENGTH	MATERIAL	NOTES
1	883A	W24X68	29'-11 7/8"	A992	
8	b883	L4X4X5/16	1'-5 1/2"	A36	
2	c833	L4X4X5/16	1'-8 1/2"	A36	
2	c883	L4X4X5/16	1'-5 1/2"	A36	
2	d817	L4X4X5/16	0'-8 1/2"	A36	
8	e817	L4X4X5/16	0'-5 1/2"	A36	
3		3/4" DIA. W/N&W	0'-2"	A325N TC	
4		3/4" DIA. W/N&W	0'-2"	A325N TC	
7		3/4" DIA. W/N&W	0'-2 1/4"	A325N TC	
2		3/4" DIA. W/N&W	0'-2 1/4"	A325N TC	
5		3/4" DIA. W/N&W	0'-2"	A325N TC	
5		3/4" DIA. W/N&W	0'-2 1/4"	A325N TC	
6		3/4" DIA. W/N&W	0'-2"	A325N TC	
24		3/4" DIA. W/N&W	0'-2"	A325N TC	

Romac By: Checked By:
Beamline By: Checked By:

A FOR APPROVAL 07/08/16

Sequence: 8 Ref. E-Plans: –
Material: A992 U.N.O. Edge Dist.: 1 1/2" U.N.O.
Holes: 13/16"DIA. Bolts: NOTED
Cleaning: NONE
Paint: NO
DFT: COLOR:

ATLAS IRON WORKS
ST. LOUIS, MO.

Project: WEBSTER UNIVERSITY INTERDISCIPLINARY SCIENCE BUILDING
Customer: PARIC CORPORATION
Owner: WEBSTER UNIVERSITY
Location: WEBSTER GUOVES,MO 63119
Dwn: ZZ Date: 07/08/2016 Ckd: LJ Date: 07/08/2016
Job No. A16013 BAT: DWG#: 883

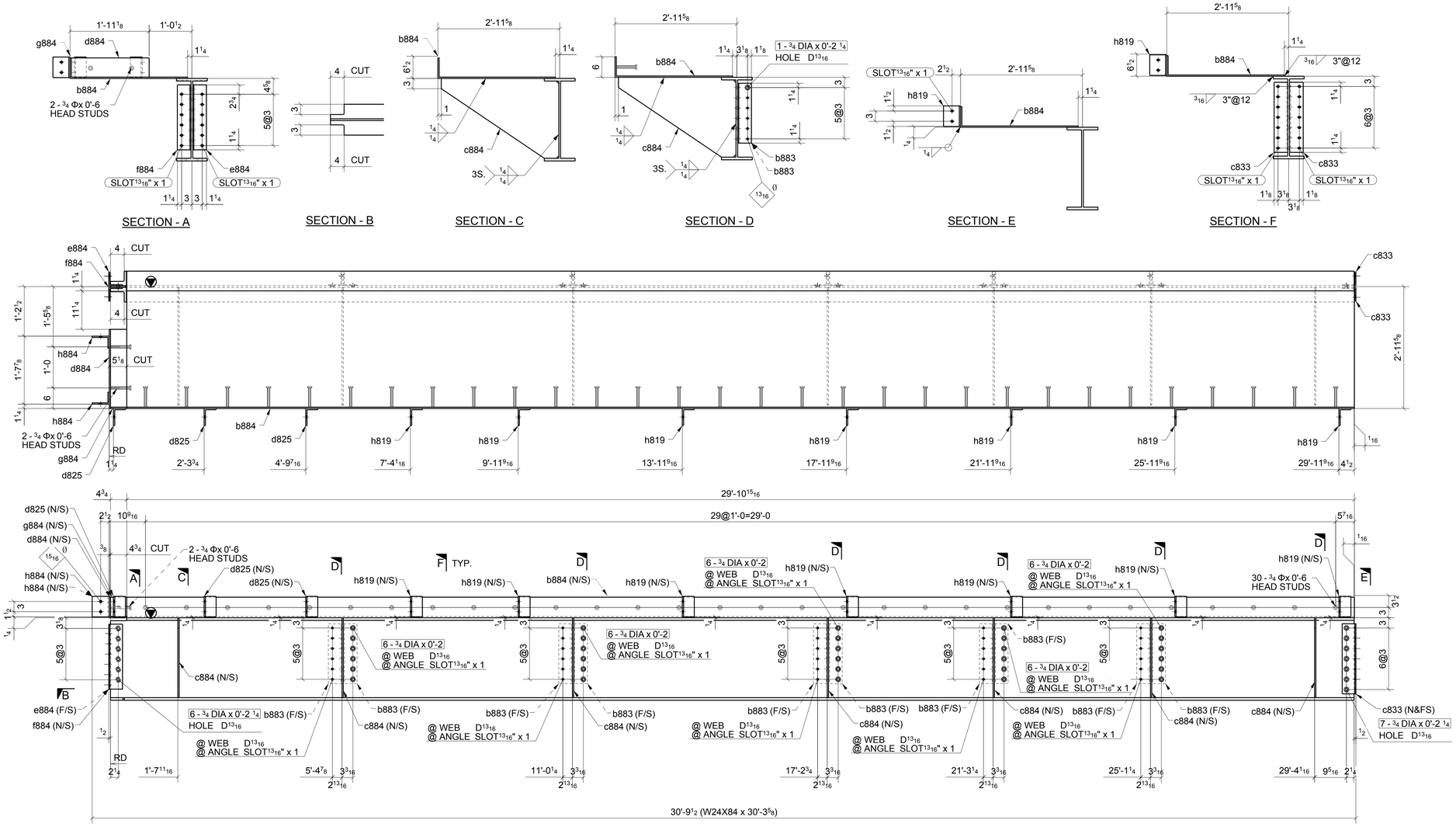

ONE - BEAM ~ 884A

LOCATION: (REF: E8B)
ONE @ 8/B-C

SHOP BOLT IN SLOTTED HOLE
NEED "HAND TIGHTEN"

MATERIAL LIST

QTY	MARK	DESCRIPTION	LENGTH	MATERIAL	NOTES
1	884A	W24X84	30'-3 5/8"	A992	
10	b883	L4X4X5/16	1'-5 1/2"	A36	
1	b884	BPL3/8"X40 3/8"	29'-10 15/1	A36	
2	c833	L4X4X5/16	1'-8 1/2"	A36	
7	c884	PL3/8"X23 3/8"	2'-10 3/8"	A36	
3	d825	L5X3-1/2X3/8	0'-6"	A36	
1	d884	BPL3/8"X11 1/8"	1'-11 1/8"	A36	
1	e884	L4X4X5/16	1'-7"	A36	
1	f884	L4X4X5/16	1'-7"	A36	
1	g884	PL3/8"X4 3/4"	0'-5 5/8"	A36	
7	h819	L5X3-1/2X3/8	0'-6"	A36	
2	h884	L5X3-1/2X3/8	0'-6"	A36	
6		3/4" DIA. W/N&W	0'-2 1/4"	A325N_TC	
7		3/4" DIA. W/N&W	0'-2 1/4"	A325N_TC	
5		3/4" DIA. W/N&W	0'-2 1/4"	A325N_TC	
30		3/4" DIA. W/N&W	0'-2"	A325N_TC	
30		3/4" STUD	0'-6"		
2		3/4" STUD	0'-6"		

Romac By: Checked By:
Beamline By: Checked By:

ATLAS IRON WORKS
ST. LOUIS, MO.

A	FOR APPROVAL		07/08/16
Sequence:	8	Ref. E-Plans:	–
Material:	A992 U.N.O.	Edge Dist.:	1 1/2" U.N.O.
Holes:	13/16"DIA.	Bolts:	NOTED
Cleaning:	NONE		
Paint:	NO		
DFT:		COLOR:	

Project: WEBSTER UNIVERSITY INTERDISCIPLINARY SCIENCE BUILDING
Customer: PARIC CORPORATION
Owner: WEBSTER UNIVERSITY
Location: WEBSTER GUOVES,MO 63119
Dwn: ZZ Date: 07/08/2016 Ckd: LJ Date: 07/08/2016
Job No. A16013 BAT: DWG#: 884

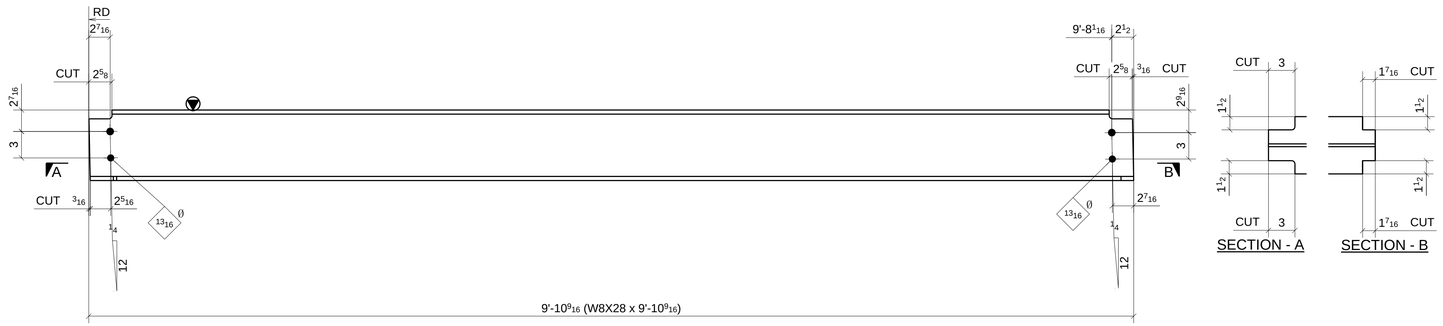

ONE - BEAM ~ 885A

LOCATION: (REF: E8B)
ONE @ 5-6/B.3-C

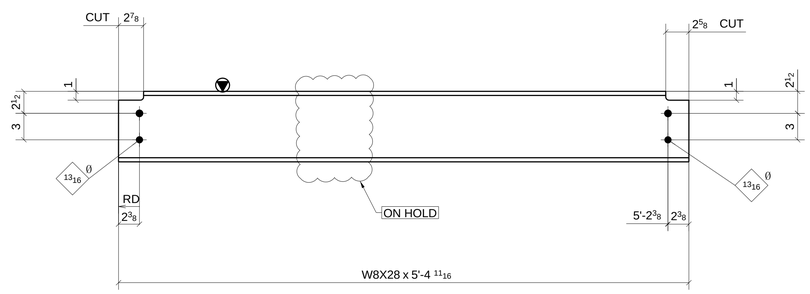

2 - BEAMS ~ 885B

LOCATION: (REF: E8B)
ONE @ 5-6/B.3-C
ONE @ 5-6/B.3-C

SHOP BOLT IN SLOTTED HOLE
NEED "HAND TIGHTEN"

FOR APPROVAL

MATERIAL LIST

	QTY	MARK	DESCRIPTION	LENGTH	MATERIAL	NOTES
	1	885A	W8X28	9'-10 9/16"	A992	
ON HOLD	2	885B	W8X28	5'-4 3/4"	A992	

Romac By: Checked By:
Beamline By: Checked By:

ATLAS IRON WORKS
ST. LOUIS, MO.

A	FOR APPROVAL	07/08/16

Sequence: 8 Ref. E-Plans: –
Material: A992 U.N.O. Edge Dist.: 1 1/2" U.N.O.
Holes: 13/16"DIA. Bolts: NOTED
Cleaning: NONE
Paint: NO
DFT: COLOR:

Project: WEBSTER UNIVERSITY INTERDISCIPLINARY SCIENCE BUILDING
Customer: PARIC CORPORATION
Owner: WEBSTER UNIVERSITY
Location: WEBSTER GUOVES,MO 63119
Dwn: ZZ Date: 07/08/2016 Ckd: LJ Date: 07/08/2016
Job No. A16013 BAT: DWG#: 885

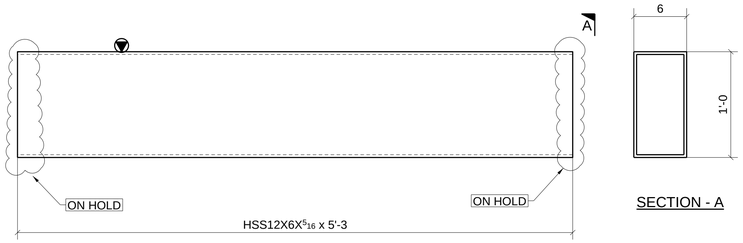

2 - BEAMS ~ 886A

LOCATION: (REF: E8B)
ONE @ 5-6/C-D
ONE @ 5-6/C.3-D

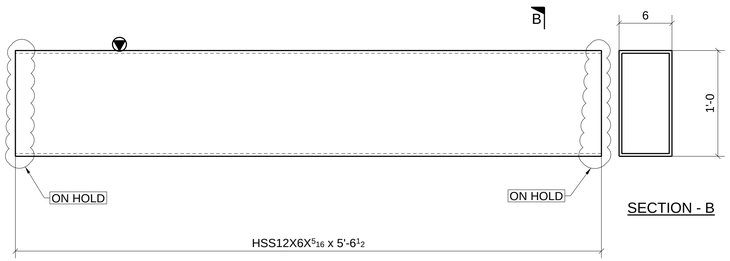

2 - BEAMS ~ 886B

LOCATION: (REF: E8B)
ONE @ 7.1-8/A.6-B
ONE @ 7.1-8/A.6-B

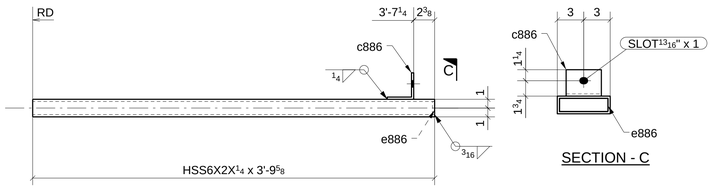

ONE - BEAM ~ 886C

LOCATION: (REF: E8B)
ONE @ 6-7/B

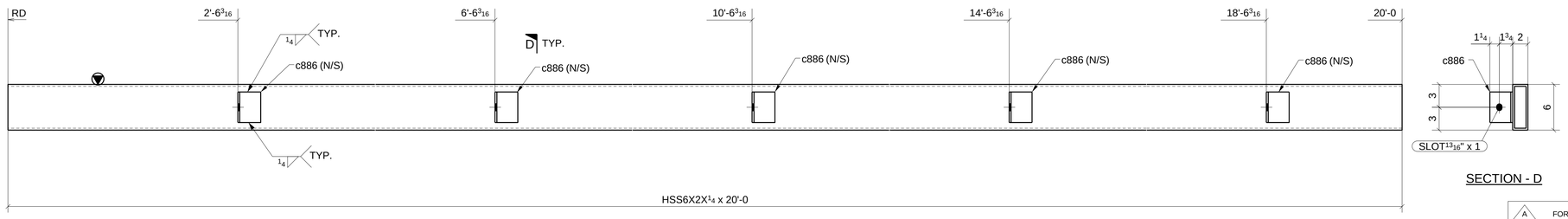

ONE - BEAM ~ 886D

LOCATION: (REF: E8C)
ONE @ 4>/B.3-C.3

MATERIAL LIST

QTY	MARK	DESCRIPTION	LENGTH	MATERIAL	NOTES
2	886A	HSS12X6X5/16	5'-3"	A500-GR.B	46
2	886B	HSS12X6X5/16	5'-6 1/2"	A500-GR.B	46
1	886C	HSS6X2X1/4	3'-9 5/8"	A500-GR.B	46
1	c886	L3X3X1/4	0'-4"	A36	
1	e886	PL1/4"X1 1/2"	0'-5 1/2"	A36	
1	886D	HSS6X2X1/4	20'-0"	A500-GR.B	46
5	c886	L3X3X1/4	0'-4"	A36	

Romac By:		Checked By:	
Beamline By:		Checked By:	

A FOR APPROVAL 07/08/16

Sequence:	8	Ref. E-Plans:	–
Material:	A992 U.N.O.	Edge Dist.:	1 1/2" U.N.O.
Holes:	13/16"DIA.	Bolts:	NOTED
Cleaning:	NONE		
Paint:	NO		
DFT:		COLOR:	

ATLAS IRON WORKS
ST. LOUIS, MO.

Project:	WEBSTER UNIVERSITY INTERDISCIPLINARY SCIENCE BUILDING				
Customer:	PARIC CORPORATION				
Owner:	WEBSTER UNIVERSITY				
Location:	WEBSTER GUOVES,MO 63119				
Dwn:	ZZ	Date: 07/08/2016	Ckd: LJ	Date:	07/08/2016
Job No.	A16013	BAT:		DWG#:	886

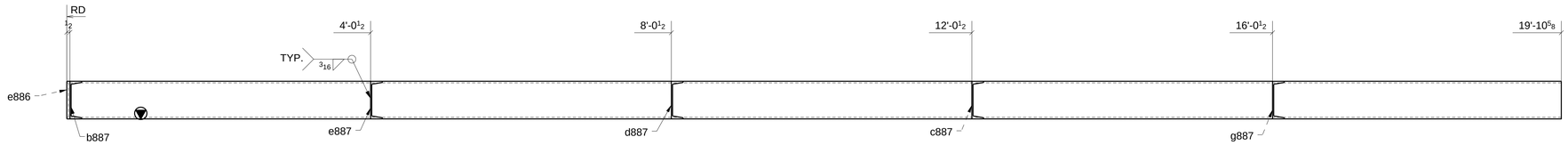

SECTION - A

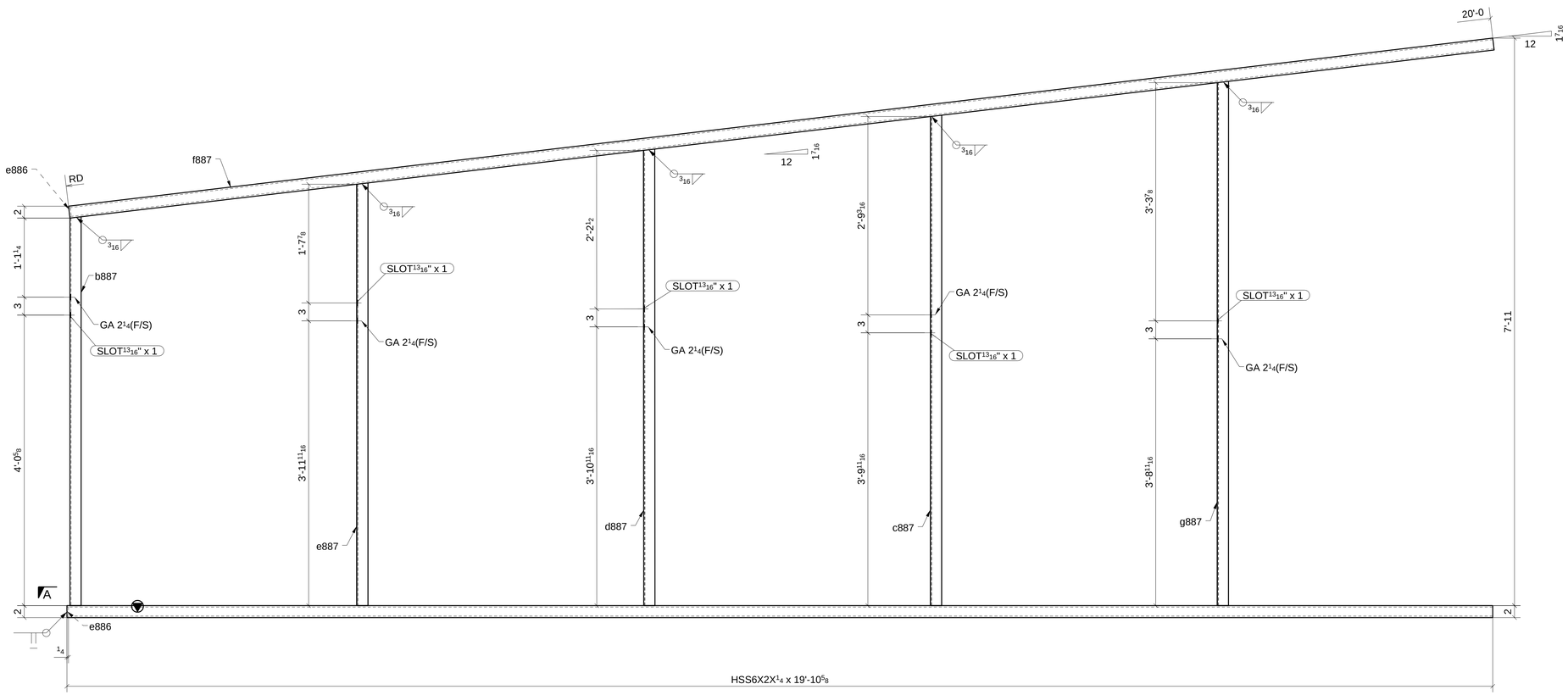

ONE - BEAM ~ 887A

LOCATION: (REF: E8C)
ONE @ 5-6/B

MATERIAL LIST

QTY	MARK	DESCRIPTION	LENGTH	MATERIAL	NOTES
1	887A	HSS6X2X1/4	19'-10 5/8"	A500-GR.B-46	
1	b887	C6X8.2	5'-5 1/16"	A992	
1	c887	C6X8.2	6'-10 1/16"	A992	
1	d887	C6X8.2	6'-4 7/16"	A992	
2	e886	PL1/4"X1 1/2"	0'-5 1/2"	A36	
1	e887	C6X8.2	5'-10 3/4"	A992	
1	f887	HSS6X2X1/4	20'-0"	A500-GR.B-46	
1	g887	C6X8.2	7'-3 3/4"	A992	

Romac By: Checked By:
Beamline By: Checked By:

A	FOR APPROVAL		07/08/16
Sequence:	8	Ref. E-Plans:	–
Material:	A992 U.N.O.	Edge Dist.:	1 1/2" U.N.O.
Holes:	13/16"DIA.	Bolts:	NOTED
Cleaning:	NONE		
Paint:	NO		
DFT:		COLOR:	

ATLAS IRON WORKS
ST. LOUIS, MO.

Project: WEBSTER UNIVERSITY INTERDISCIPLINARY SCIENCE BUILDING
Customer: PARIC CORPORATION
Owner: WEBSTER UNIVERSITY
Location: WEBSTER GUOVES,MO 63119
Dwn: ZZ Date: 07/08/2016 Ckd: LJ Date: 07/08/2016
Job No. A16013 BAT: DWG#: 887

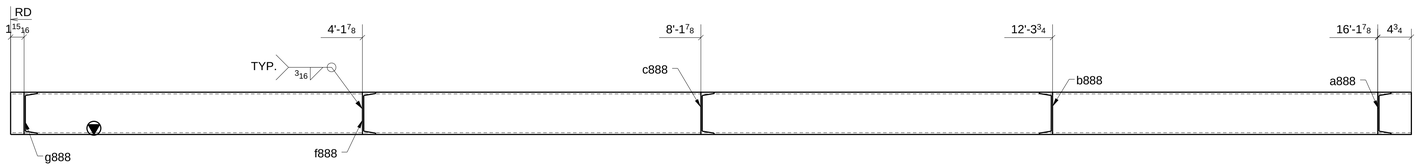

SECTION - A

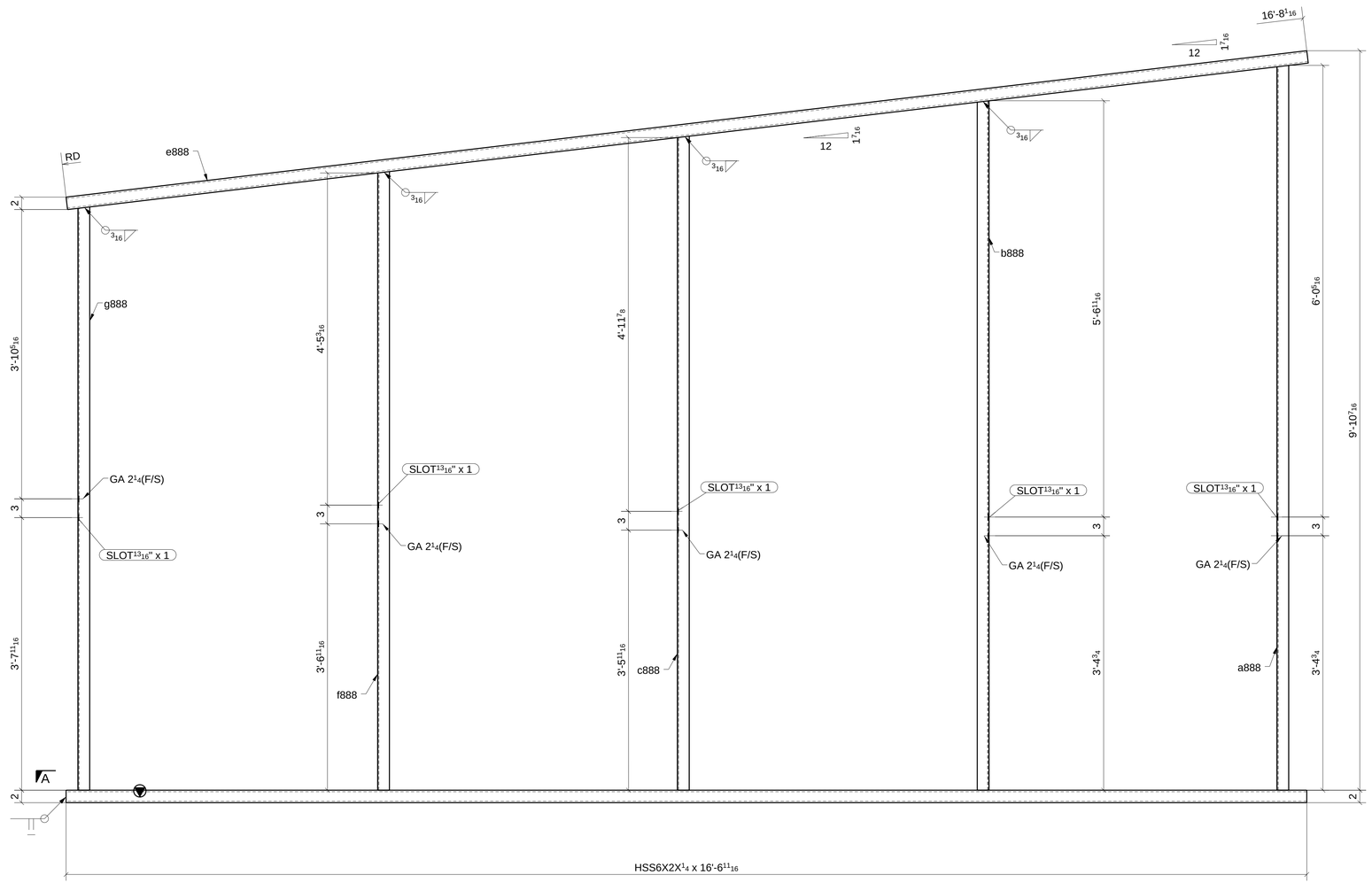

ONE - BEAM ~ 888A

LOCATION: (REF: E8C)
ONE @ 5-7/B

MATERIAL LIST

QTY	MARK	DESCRIPTION	LENGTH	MATERIAL	NOTES
1	888A	HSS6X2X1/4	16'-6 11/16"	A500-GR.B-46	
1	a888	C6X8.2	9'-8 1/16"	A992	
1	b888	C6X8.2	9'-2 7/16"	A992	
1	c888	C6X8.2	8'-8 3/4"	A992	
1	e888	HSS6X2X1/4	16'-8 1/16"	A500-GR.B-46	
1	f888	C6X8.2	8'-3 1/16"	A992	
1	g888	C6X8.2	7'-9 7/16"	A992	

Romac By: Checked By:
Beamline By: Checked By:

A FOR APPROVAL 07/08/16

Sequence: 8 Ref. E-Plans: --
Material: A992 U.N.O. Edge Dist.: 1 1/2" U.N.O.
Holes: 13/16"DIA. Bolts: NOTED
Cleaning: NONE
Paint: NO
DFT: COLOR:

ATLAS IRON WORKS
ST. LOUIS, MO.

Project: WEBSTER UNIVERSITY INTERDISCIPLINARY SCIENCE BUILDING
Customer: PARIC CORPORATION
Owner: WEBSTER UNIVERSITY
Location: WEBSTER GUOVES,MO 63119
Dwn: ZZ Date: 07/08/2016 Ckd: LJ Date: 07/08/2016
Job No. A16013 BAT: DWG#: 888

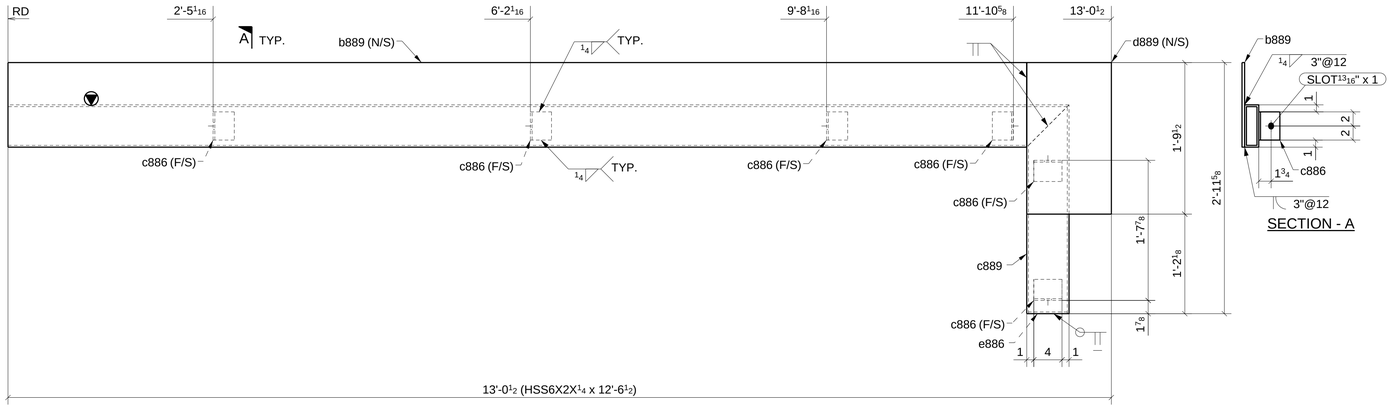

SECTION - A

ONE - BEAM ~ 889A

LOCATION: (REF: E8B)
ONE @ 8>/C.3-D

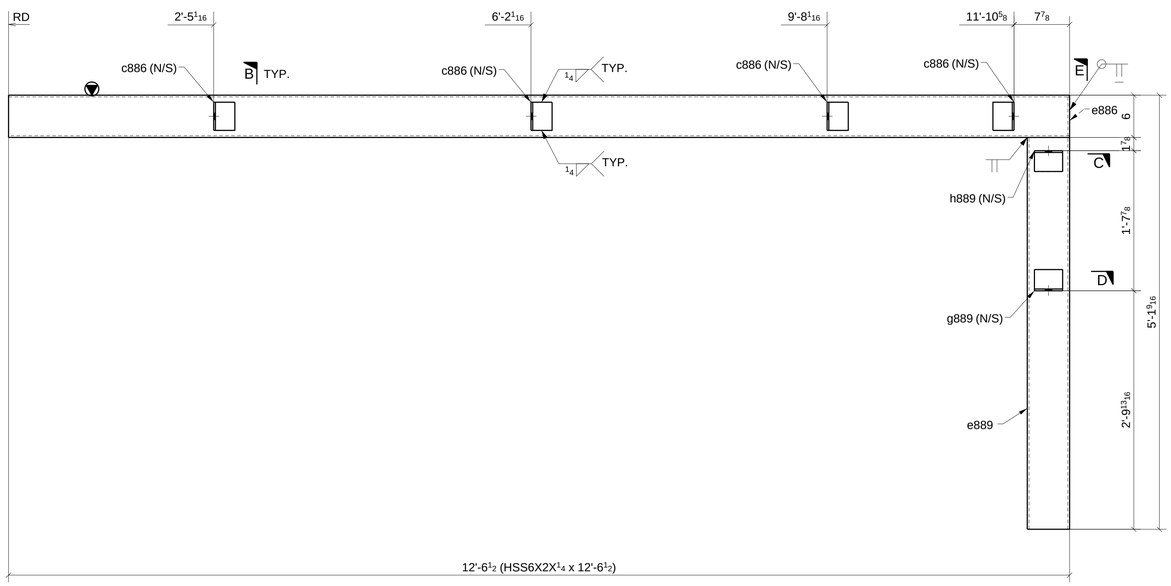

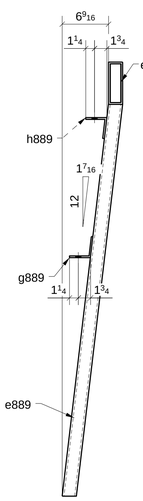

SECTION - E

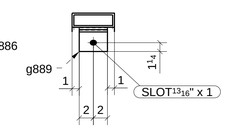

SECTION - D

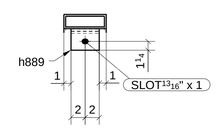

SECTION - C

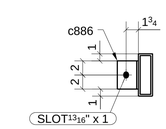

SECTION - B

ONE - BEAM ~ 889B

LOCATION: (REF: E8C)
ONE @ 4>/C.3>

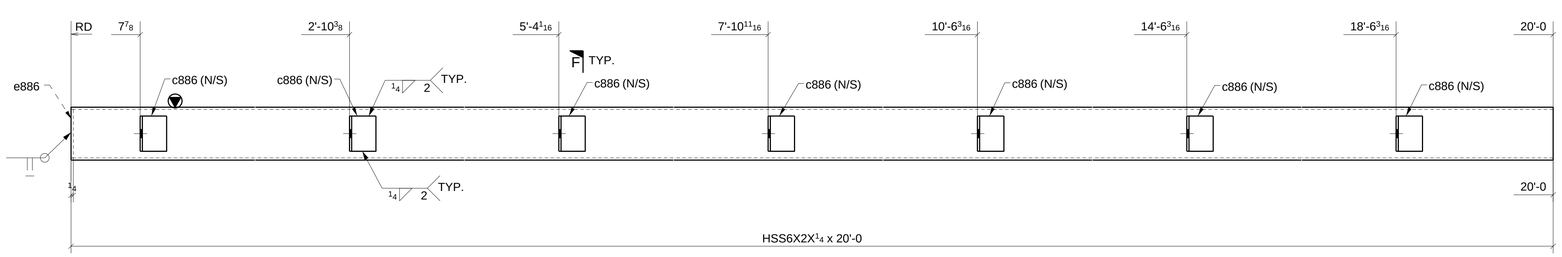

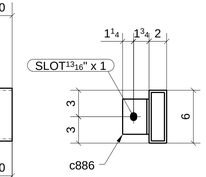

SECTION - F

ONE - BEAM ~ 889C

LOCATION: (REF: E8C)
ONE @ 4>/A.5-C

MATERIAL LIST

QTY	MARK	DESCRIPTION	LENGTH	MATERIAL	NOTES
1	889A	HSS6X2X1/4	12'-6 1/2"	A500-GR.B-46	
1	b889	PL3/8"X12"	12'-0 1/2"	A36	
6	c886	L3X3X1/4	0'-4"	A36	
1	c889	HSS6X2X1/4	2'-5 5/8"	A500-GR.B-46	
1	d889	PL3/8"X12"	1'-9 1/2"	A36	
1	e886	PL1/4"X1 1/2"	0'-5 1/2"	A36	
1	889B	HSS6X2X1/4	12'-6 1/2"	A500-GR.B-46	
4	c886	L3X3X1/4	0'-4"	A36	
1	e886	PL1/4"X1 1/2"	0'-5 1/2"	A36	
1	e889	HSS6X2X1/4	4'-8 3/16"	A500-GR.B-46	
1	g889	BPL1/4"*6"	0'-4"	A36	
1	h889	BPL1/4"*6"	0'-4"	A36	
1	889C	HSS6X2X1/4	20'-0"	A500-GR.B-46	
7	c886	L3X3X1/4	0'-4"	A36	
1	e886	PL1/4"X1 1/2"	0'-5 1/2"	A36	

Romac By: Checked By:
Beamline By: Checked By:

A FOR APPROVAL 07/08/16

Sequence: 8 Ref. E-Plans: --
Material: A992 U.N.O. Edge Dist.: 1 1/2" U.N.O.
Holes: 13/16"DIA. Bolts: NOTED
Cleaning: NONE
Paint: NO
DFT: COLOR:

ATLAS IRON WORKS
ST. LOUIS, MO.

Project: WEBSTER UNIVERSITY INTERDISCIPLINARY SCIENCE BUILDING
Customer: PARIC CORPORATION
Owner: WEBSTER UNIVERSITY
Location: WEBSTER GUOVES,MO 63119
Dwn: ZZ Date: 07/08/2016 Ckd: LJ Date: 07/08/2016
Job No. A16013 BAT: DWG#: 889

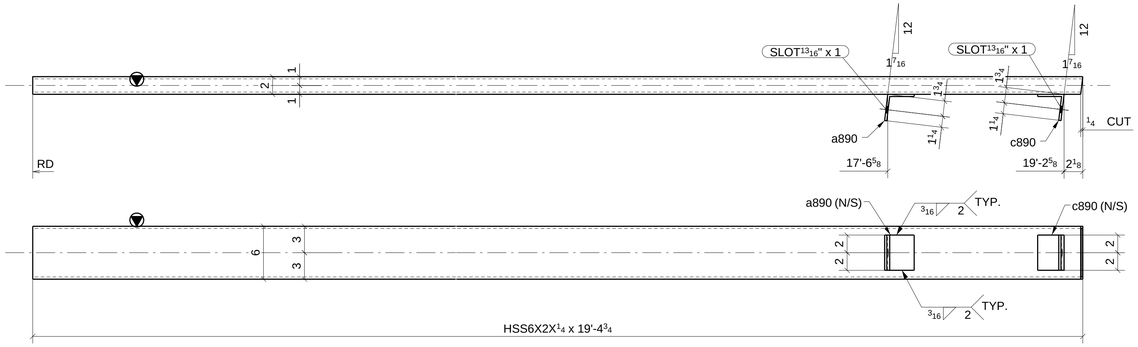

ONE - BEAM ~ 890A

LOCATION: (REF: E8C)
ONE @ 4>/A.5-B.3

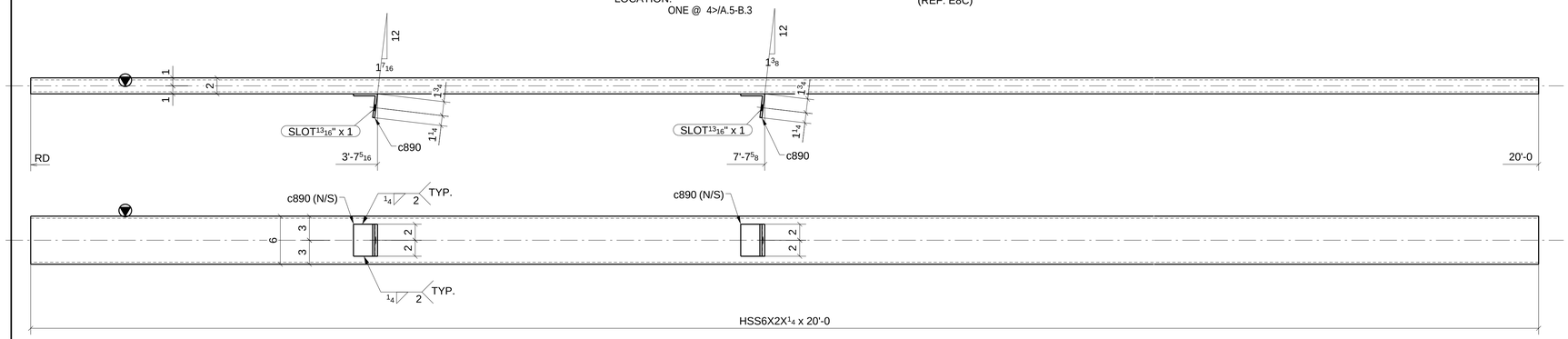

ONE - BEAM ~ 890B

LOCATION: (REF: E8C)
ONE @ 6-8/B

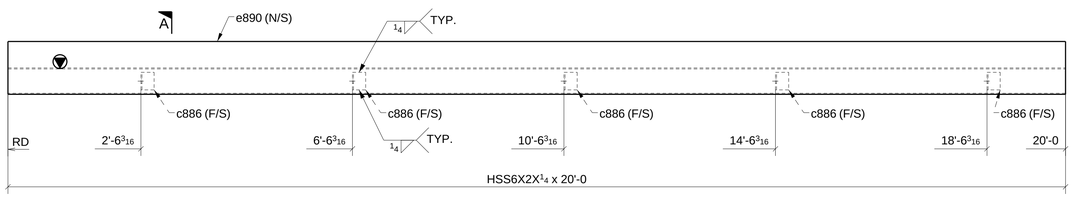

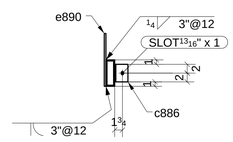

SECTION - A

ONE - BEAM ~ 890C

LOCATION: (REF: E8B)
ONE @ 8>/B.3-C.3

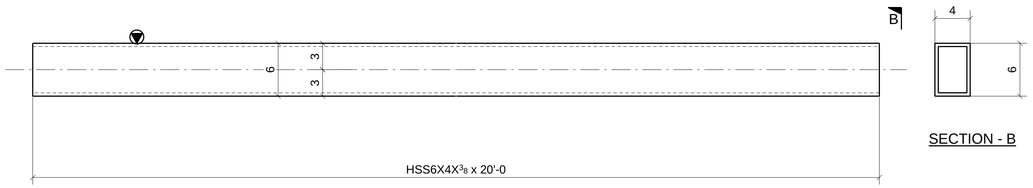

SECTION - B

3 - BEAMS ~ 890D

LOCATION: (REF: E8C)
ONE @ 4>/A.5-C
ONE @ 5-7/B.3-C.3
ONE @ 6-8/C-D

FOR APPROVAL

MATERIAL LIST

QTY	MARK	DESCRIPTION	LENGTH	MATERIAL	NOTES
1	890A	HSS6X2X1/4	19'-4 3/4"	A500-GR.B-46	
1	a890	BPL1/4"*6"	0'-4"	A36	
1	c890	BPL1/4"*6"	0'-4"	A36	
1	890B	HSS6X2X1/4	20'-0"	A500-GR.B-46	
2	c890	BPL1/4"*6"	0'-4"	A36	
1	890C	HSS6X2X1/4	20'-0"	A500-GR.B-46	
5	c886	L3X3X1/4	0'-4"	A36	
1	e890	PL3/8"X12"	20'-0"	A36	
3	890D	HSS6X4X3/8	20'-0"	A500-GR.B-46	

Romac By: Checked By:
Beamline By: Checked By:

A	FOR APPROVAL	07/08/16

Sequence: 8 Ref. E-Plans: –
Material: A992 U.N.O. Edge Dist.: 1 1/2" U.N.O.
Holes: 13/16"DIA. Bolts: NOTED
Cleaning: NONE
Paint: NO
DFT: COLOR:

ATLAS IRON WORKS
ST. LOUIS, MO.

Project: WEBSTER UNIVERSITY INTERDISCIPLINARY SCIENCE BUILDING
Customer: PARIC CORPORATION
Owner: WEBSTER UNIVERSITY
Location: WEBSTER GUOVES,MO 63119
Dwn: ZZ Date: 07/08/2016 Ckd: LJ Date: 07/08/2016
Job No. A16013 BAT: DWG#: 890

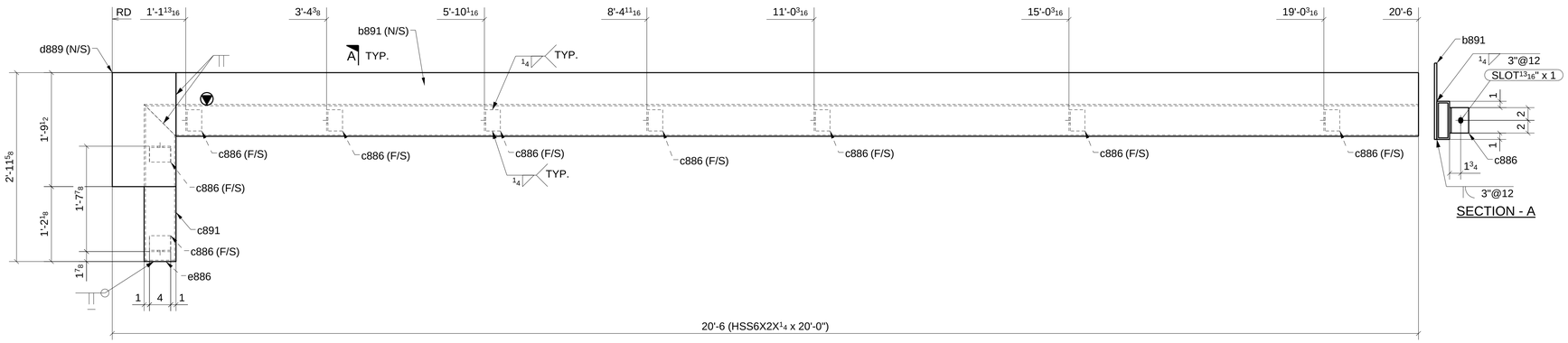

ONE - BEAM ~ 891A

LOCATION: (REF: E8B)
ONE @ 8>/B-C

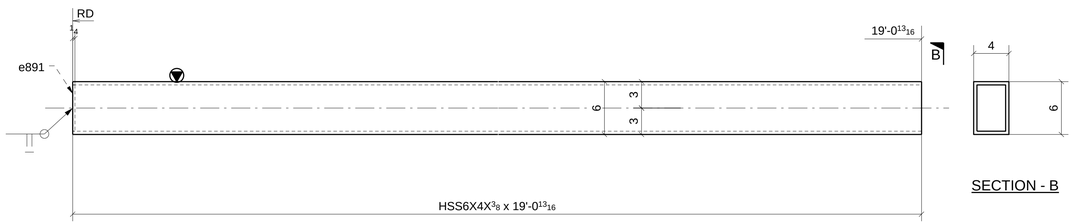

ONE - BEAM ~ 891B

LOCATION: (REF: E8C)
ONE @ 5-6/B.3-C

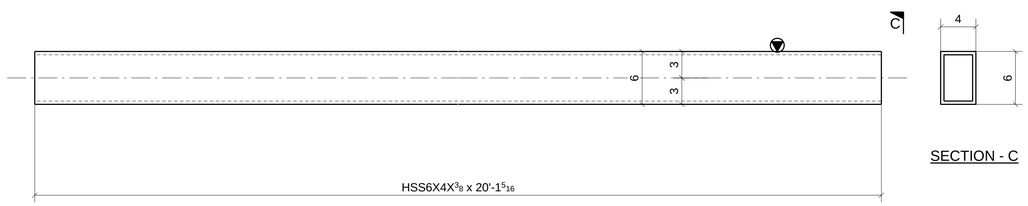

ONE - BEAM ~ 891C

LOCATION: (REF: E8C)
ONE @ 4>/B.3-C.3

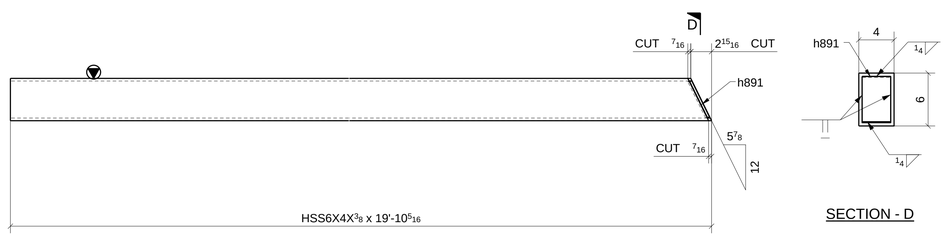

ONE - BEAM ~ 891D

LOCATION: (REF: E8C)
ONE @ 4>/C.3>

MATERIAL LIST

QTY	MARK	DESCRIPTION	LENGTH	MATERIAL	NOTES
1	891A	HSS6X2X1/4	20'-0"	A500-GR.B-46	
1	b891	PL3/8"X12"	19'-6"	A36	
9	c886	L3X3X1/4	0'-4"	A36	
1	c891	HSS6X2X1/4	2'-5 5/8"	A500-GR.B-46	
1	d889	PL3/8"X12"	1'-9 1/2"	A36	
1	e886	PL1/4"X1 1/2"	0'-5 1/2"	A36	
1	891B	HSS6X4X3/8	19'-0 13/16"	A500-GR.B-46	
1	e891	PL1/4"X3 1/4"	0'-5 1/4"	A36	
1	891C	HSS6X4X3/8	20'-1 5/16"	A500-GR.B-46	
1	891D	HSS6X4X3/8	19'-10 5/16"	A500-GR.B-46	
1	h891	PL1/4"X3 1/4"	0'-5 7/8"	A36	

Romac By: Checked By:
Beamline By: Checked By:

A FOR APPROVAL 07/08/16

Sequence: 8 Ref. E-Plans: –
Material: A992 U.N.O. Edge Dist.: 1 1/2" U.N.O.
Holes: 13/16"DIA. Bolts: NOTED
Cleaning: NONE
Paint: NO
DFT: COLOR:

ATLAS IRON WORKS
ST. LOUIS, MO.

Project: WEBSTER UNIVERSITY INTERDISCIPLINARY SCIENCE BUILDING
Customer: PARIC CORPORATION
Owner: WEBSTER UNIVERSITY
Location: WEBSTER GUOVES,MO 63119
Dwn: ZZ Date: 07/08/2016 Ckd: LJ Date: 07/08/2016
Job No. A16013 BAT: DWG#: 891

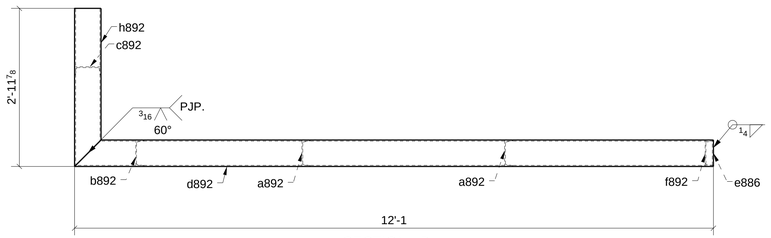

SECTION - B

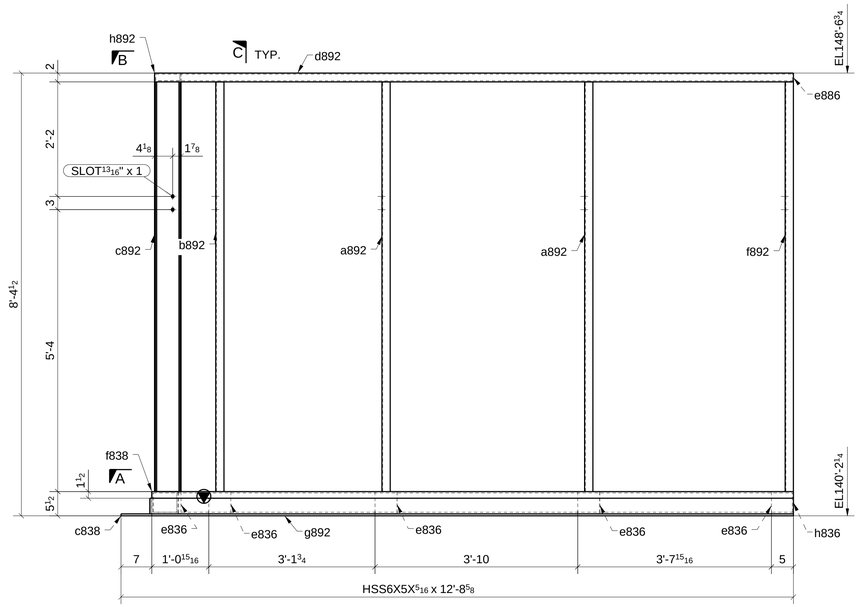

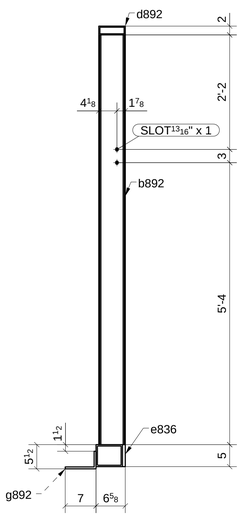

SECTION - C

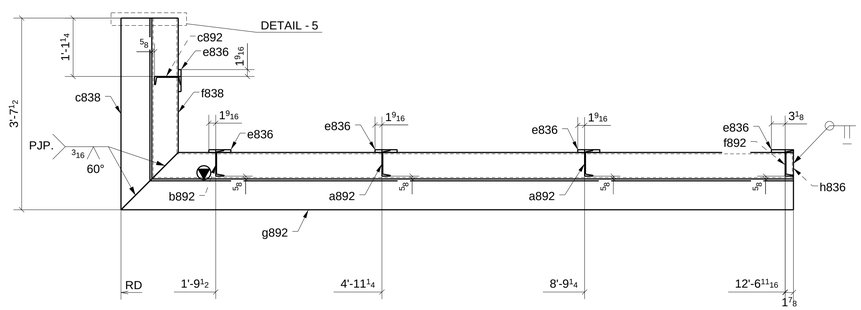

SECTION - A

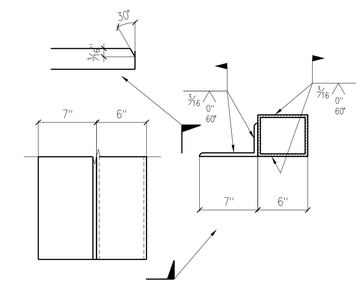

DETAIL "5"

ONE - BEAM ~ 892A

LOCATION: (REF: E8B)
ONE @ 8/A.6-B

SHOP BOLT IN SLOTTED HOLE
NEED "HAND TIGHTEN"

MATERIAL LIST

QTY	MARK	DESCRIPTION	LENGTH	MATERIAL	NOTES
1	892A	HSS6X5X5/16	12'-1 5/8"	A500-GR.B-46	
2	a892	C6X8.2	7'-9"	A992	
1	b892	C6X8.2	7'-9"	A992	
1	c838	L7X4X7/16	3'-7 1/2"	A36	GALV.
1	c892	C6X8.2	7'-9"	A992	
1	d892	HSS6X2X1/4	12'-1"	A500-GR.B-46	
5	e836	PL5/8"X5"	0'-5"	A36	
1	e886	PL1/4"X1 1/2"	0'-5 1/2"	A36	
1	f838	HSS6X5X5/16	3'-0 1/2"	A500-GR.B-46	
1	f892	C6X8.2	7'-9"	A992	
1	g892	L7X4X7/16	12'-8 5/8"	A36	GALV.
1	h836	PL1/4"X4 3/8"	0'-5 3/8"	A36	
1	h892	HSS6X2X1/4	2'-11 7/8"	A500-GR.B-46	

Romac By: Checked By:
Beamline By: Checked By:

ATLAS IRON WORKS
ST. LOUIS, MO.

Project:	WEBSTER UNIVERSITY INTERDISCIPLINARY SCIENCE BUILDING
Customer:	PARIC CORPORATION
Owner:	WEBSTER UNIVERSITY
Location:	WEBSTER GUOVES,MO 63119
Dwn: ZZ	Date: 07/08/2016 Ckd: LJ Date: 07/08/2016
Job No.	A16013 BAT: DWG#: 892

A FOR APPROVAL 07/08/16

Sequence:	8	Ref. E-Plans:	–
Material:	A992 U.N.O.	Edge Dist.:	1 1/2" U.N.O.
Holes:	13/16"DIA.	Bolts:	NOTED
Cleaning:	NONE		
Paint:	NO		
DFT:		COLOR:	

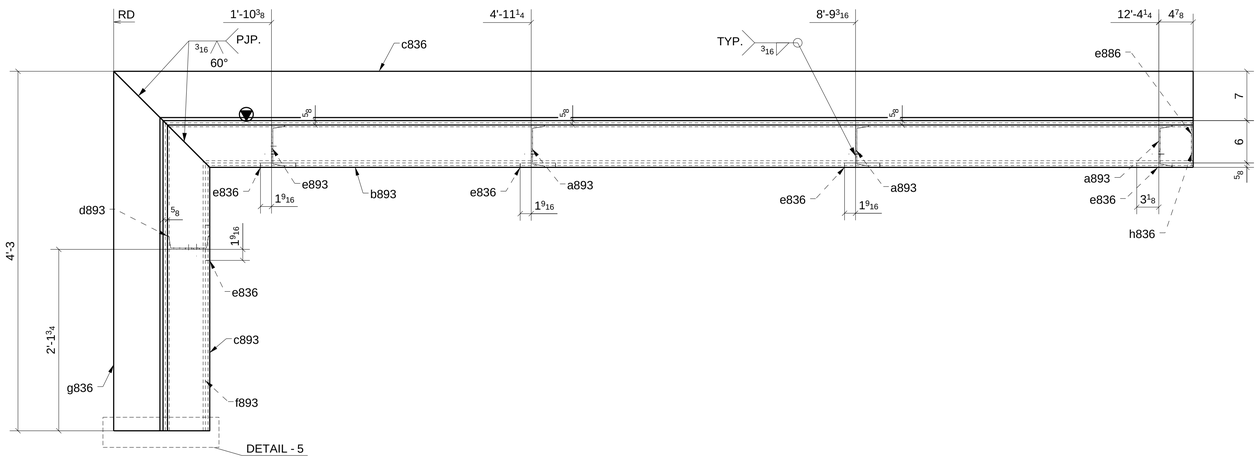

SECTION - A

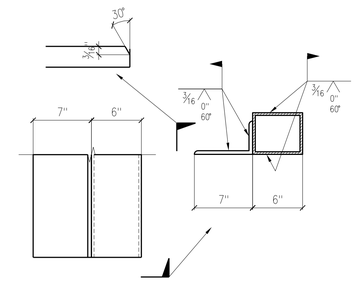

DETAIL "5"

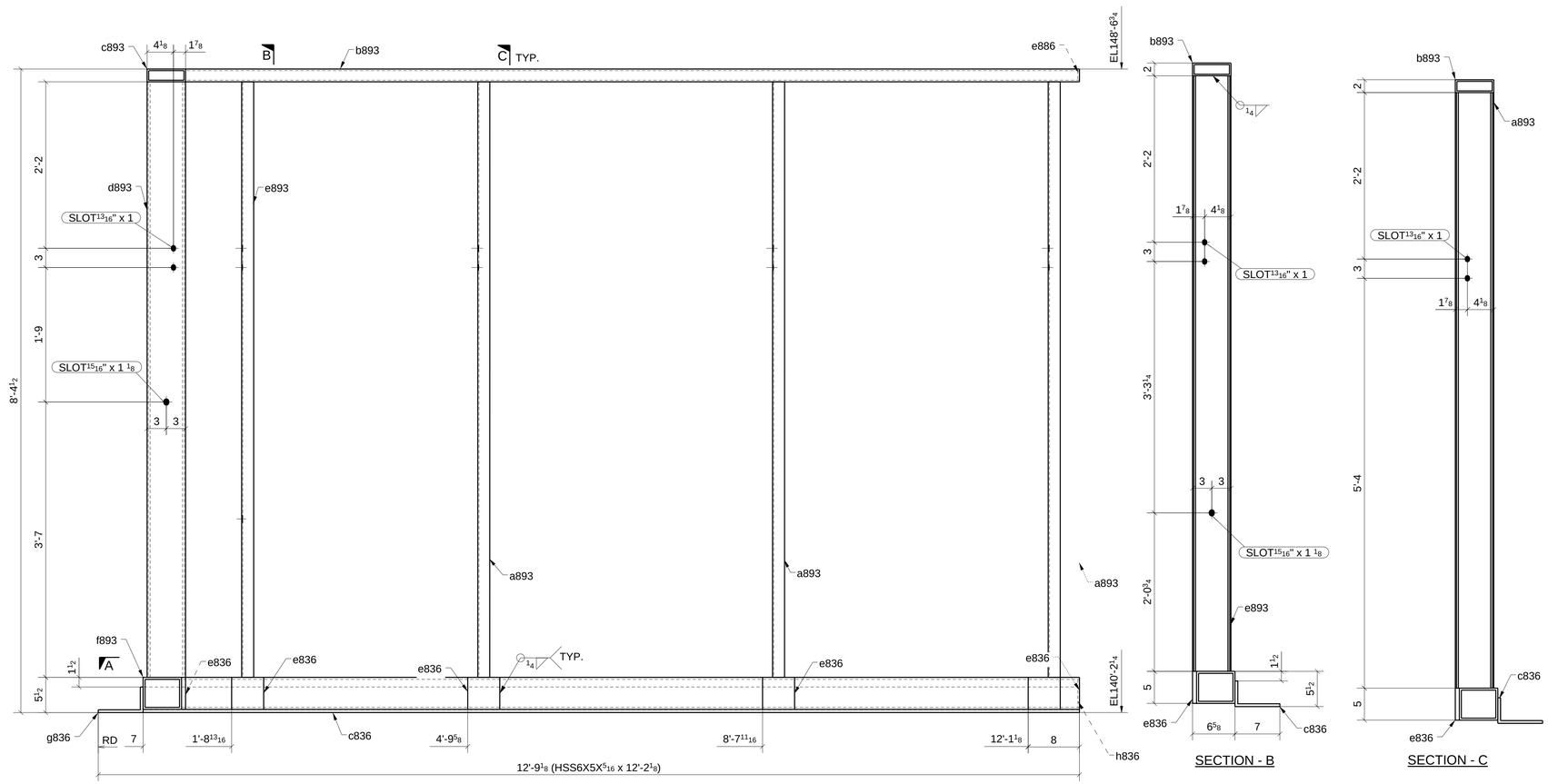

SECTION - B

SECTION - C

ONE - BEAM ~ 893A

LOCATION: (REF: E8B)
ONE @ 7-7.1/A.6-B

SHOP BOLT IN SLOTTED HOLE
NEED "HAND TIGHTEN"

MATERIAL LIST

QTY	MARK	DESCRIPTION	LENGTH	MATERIAL	NOTES
1	893A	HSS6X5X5/16	12'-2 1/8"	A500-GR.B-46	
3	a893	C6X8.2	7'-9"	A992	
1	b893	HSS6X2X1/4	12'-1 1/2"	A500-GR.B-46	
1	c836	L7X4X7/16	12'-9 1/8"	A36	GALV.
1	c893	HSS6X2X1/4	3'-7 3/8"	A500-GR.B-46	
1	d893	C6X8.2	7'-9"	A992	
5	e836	PL5/8"X5"	0'-5"	A36	
1	e886	PL1/4"X1 1/2"	0'-5 1/2"	A36	
1	e893	C6X8.2	7'-9"	A992	
1	f893	HSS6X5X5/16	3'-8"	A500-GR.B-46	
1	g836	L7X4X7/16	4'-3"	A36	GALV.
1	h836	PL1/4"X4 3/8"	0'-5 3/8"	A36	

Romac By: Checked By:
Beamline By: Checked By:

A FOR APPROVAL 07/08/16

Sequence: 8 Ref. E-Plans: –
Material: A992 U.N.O. Edge Dist.: 1 1/2" U.N.O.
Holes: 13/16"DIA. Bolts: NOTED
Cleaning: NONE
Paint: NO
DFT: COLOR:

ATLAS IRON WORKS
ST. LOUIS, MO.

Project: WEBSTER UNIVERSITY INTERDISCIPLINARY SCIENCE BUILDING
Customer: PARIC CORPORATION
Owner: WEBSTER UNIVERSITY
Location: WEBSTER GUOVES,MO 63119
Dwn: ZZ Date: 07/08/2016 Ckd: LJ Date: 07/08/2016
Job No. A16013 BAT: DWG#: 893

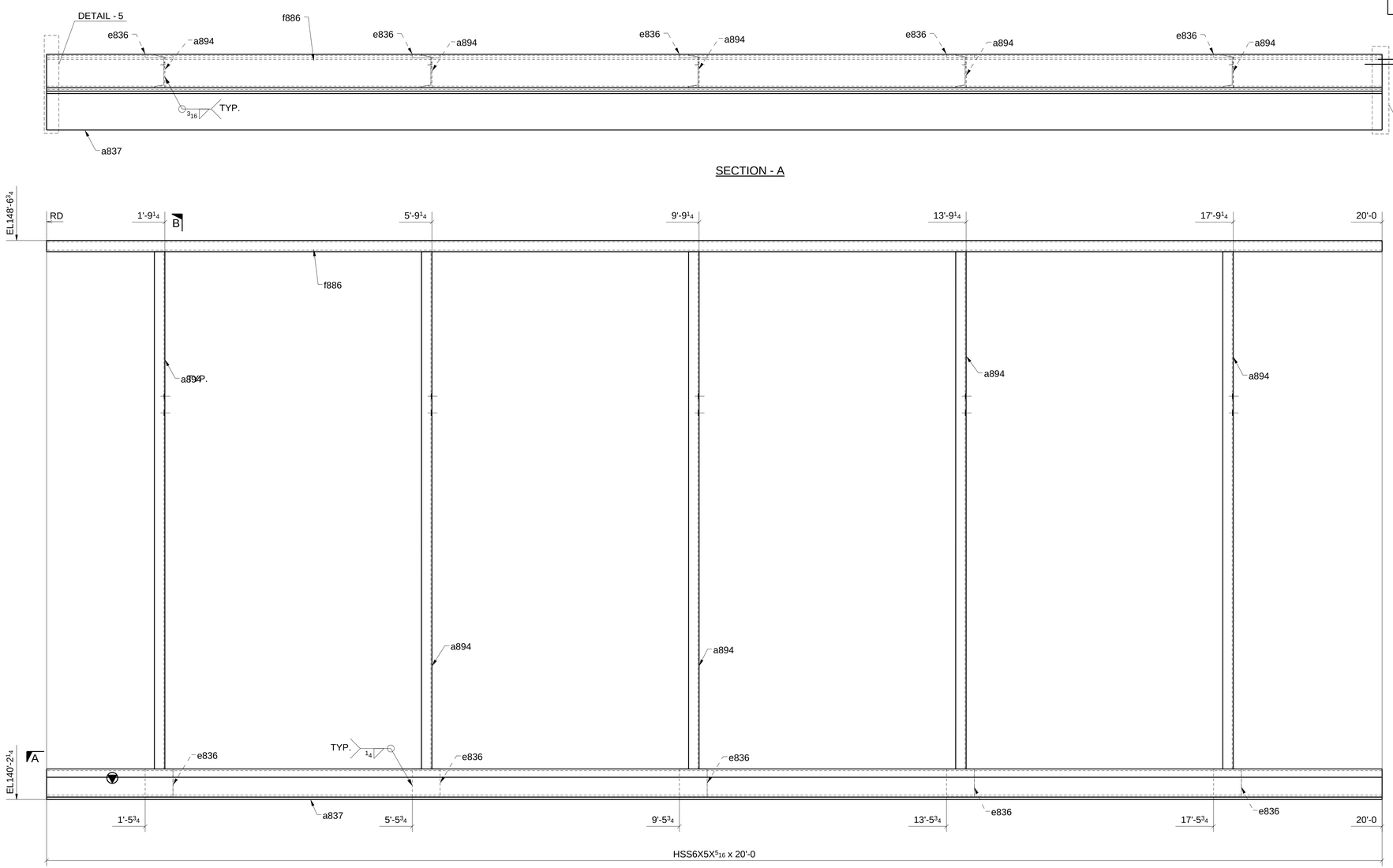

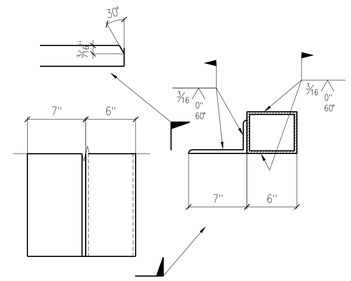

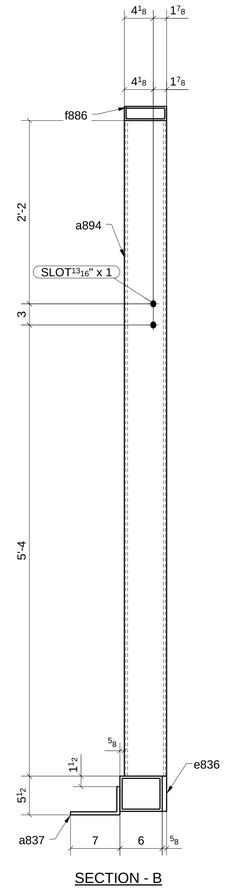

ONE - BEAM ~ 894A

LOCATION: (REF: E8B)
ONE @ 7.1-8/A.6

SHOP BOLT IN SLOTTED HOLE
NEED "HAND TIGHTEN"

MATERIAL LIST

QTY	MARK	DESCRIPTION	LENGTH	MATERIAL	NOTES
1	894A	HSS6X5X5/16	20'-0"	A500-GR.B-46	
1	a837	L7X4X7/16	20'-0"	A36	GALV.
5	a894	C6X8.2	7'-9"	A992	
5	e836	PL5/8"X5"	0'-5"	A36	
1	f886	HSS6X2X1/4	20'-0"	A500-GR.B-46	

Romac By: Checked By:
Beamline By: Checked By:

A	FOR APPROVAL	07/08/16

Sequence: 8 Ref. E-Plans: –
Material: A992 U.N.O. Edge Dist.: 1 1/2" U.N.O.
Holes: 13/16"DIA. Bolts: NOTED
Cleaning: NONE
Paint: NO
DFT: COLOR:

ATLAS IRON WORKS
ST. LOUIS, MO.

Project: WEBSTER UNIVERSITY INTERDISCIPLINARY SCIENCE BUILDING
Customer: PARIC CORPORATION
Owner: WEBSTER UNIVERSITY
Location: WEBSTER GUOVES,MO 63119
Dwn: ZZ Date: 07/08/2016 Ckd: LJ Date: 07/08/2016
Job No. A16013 BAT: DWG#: 894

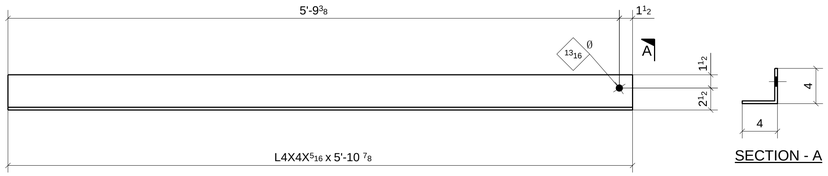

ONE - ANGLE ~ 895A

(REF: E8B)

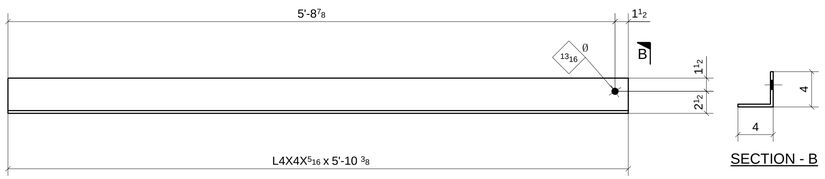

ONE - ANGLE ~ 895B

(REF: E8B)

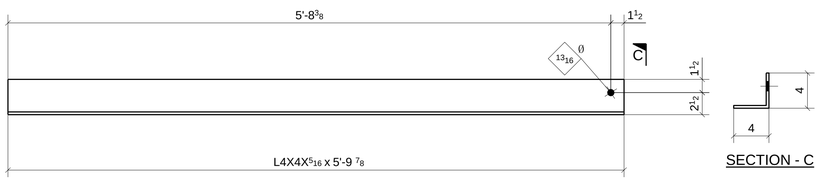

ONE - ANGLE ~ 895C

(REF: E8B)

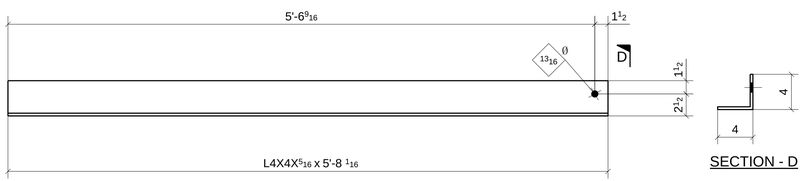

ONE - ANGLE ~ 895D

(REF: E8B)

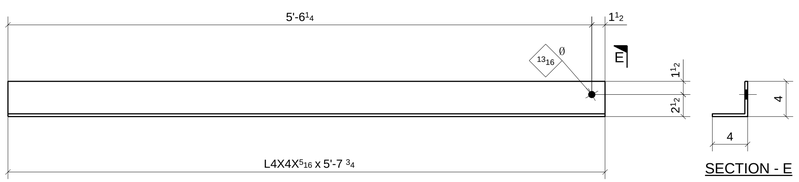

ONE - ANGLE ~ 895F

(REF: E8B)

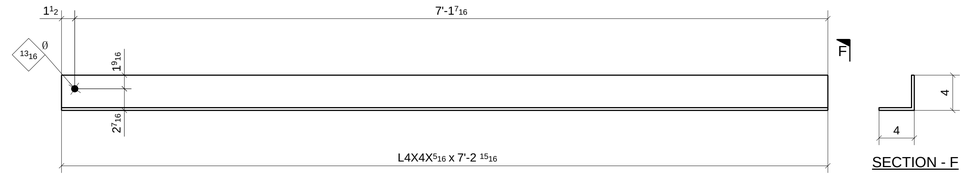

3 - ANGLES ~ 895H

(REF: E8B)

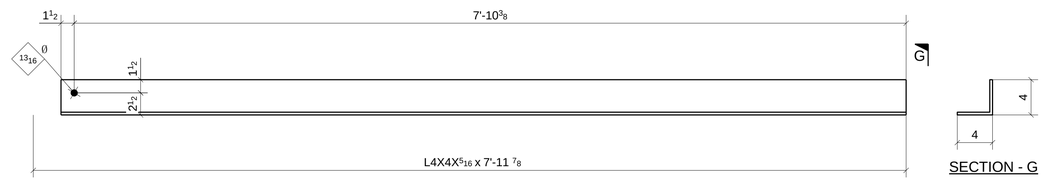

5 - ANGLES ~ 895K

(REF: E8B)

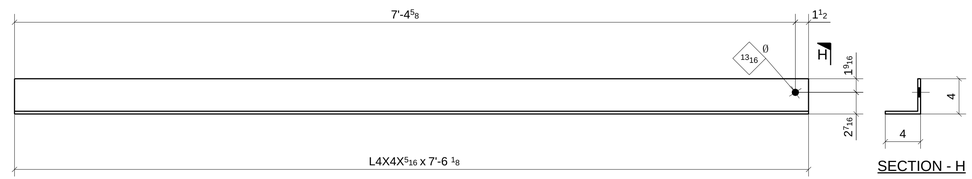

3 - ANGLES ~ 895M

(REF: E8B)

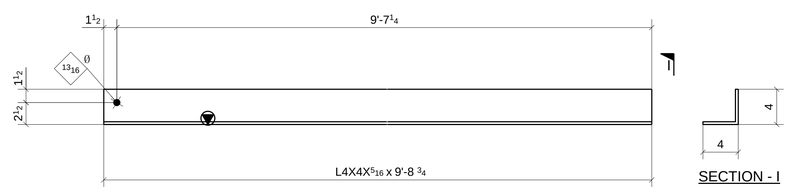

ONE - ANGLE ~ 895P

(REF: E8B)

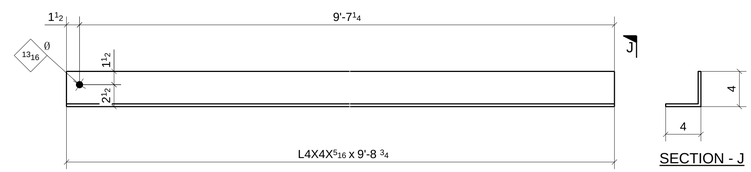

6 - ANGLES ~ 895T

(REF: E8B)

FOR APPROVAL

MATERIAL LIST

QTY	MARK	DESCRIPTION	LENGTH	MATERIAL	NOTES
1	895A	L4X4X5/16	5'-10 7/8"	A36	
1	895B	L4X4X5/16	5'-10 3/8"	A36	
1	895C	L4X4X5/16	5'-9 7/8"	A36	
1	895D	L4X4X5/16	5'-8 1/16"	A36	
1	895F	L4X4X5/16	5'-7 3/4"	A36	
3	895H	L4X4X5/16	7'-2 15/16"	A36	
5	895K	L4X4X5/16	7'-11 7/8"	A36	
3	895M	L4X4X5/16	7'-6 1/8"	A36	
1	895P	L4X4X5/16	9'-8 3/4"	A36	
6	895T	L4X4X5/16	9'-8 3/4"	A36	

Romac By: _____ Checked By: _____

Beamline By: _____ Checked By: _____

ATLAS IRON WORKS
ST. LOUIS, MO.

Project:	WEBSTER UNIVERSITY INTERDISCIPLINARY SCIENCE BUILDING
Customer:	PARIC CORPORATION
Owner:	WEBSTER UNIVERSITY
Location:	WEBSTER GUOVES,MO 63119
Dwn: ZZ	Date: 07/08/2016 Ckd: LJ Date: 07/08/2016
Job No.	A16013 BAT: DWG#: 895

A FOR APPROVAL 07/08/16

Sequence:	8	Ref. E-Plans:	–
Material:	A992 U.N.O.	Edge Dist.:	1 1/2" U.N.O.
Holes:	13/16"DIA.	Bolts:	NOTED
Cleaning:	NONE		
Paint:	NO		
DFT:		COLOR:	

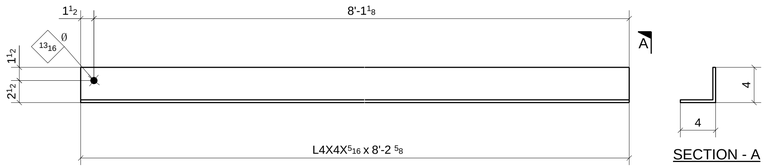

7 - ANGLES ~ 896A

(REF: E8B)

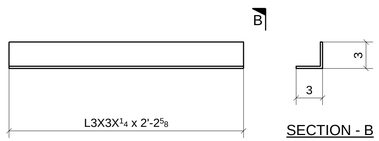

ONE - ANGLE ~ 896B

(REF: E8B)

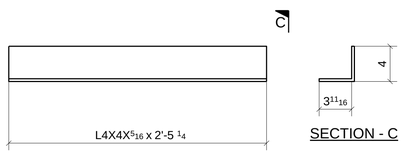

8 - ANGLES ~ 896C

(REF: E8B)

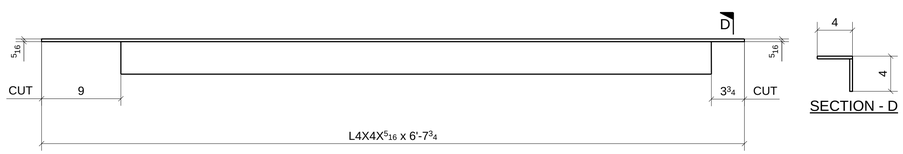

ONE - ANGLE ~ 896D

(REF: E8B)

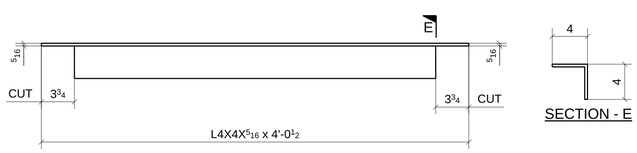

ONE - ANGLE ~ 896F

(REF: E8B)

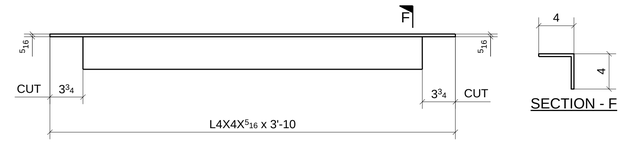

ONE - ANGLE ~ 896H

(REF: E8B)

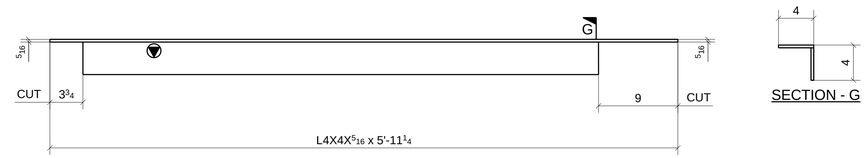

ONE - ANGLE ~ 896K

(REF: E8B)

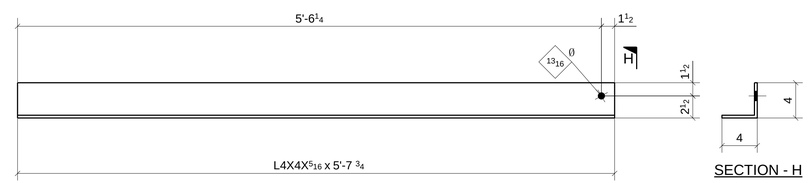

ONE - ANGLE ~ 896M

(REF: E8B)

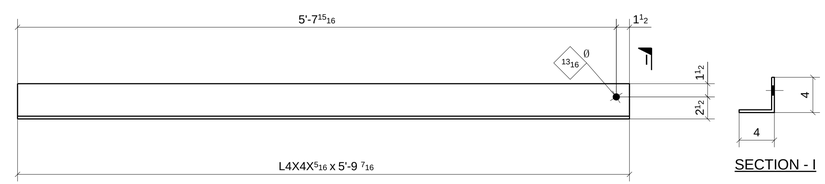

ONE - ANGLE ~ 896P

(REF: E8B)

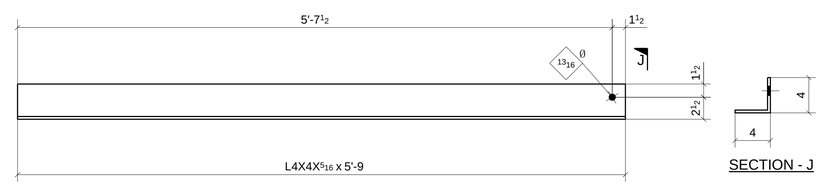

ONE - ANGLE ~ 896T

(REF: E8B)

MATERIAL LIST

QTY	MARK	DESCRIPTION	LENGTH	MATERIAL	NOTES
7	896A	L4X4X5/16	8'-2 5/8"	A36	
1	896B	L3X3X1/4	2'-2 5/8"	A36	
8	896C	L4X4X5/16	2'-5 1/4"	A36	
1	896D	L4X4X5/16	6'-7 3/4"	A36	
1	896F	L4X4X5/16	4'-0 1/2"	A36	
1	896H	L4X4X5/16	3'-10"	A36	
1	896K	L4X4X5/16	5'-11 1/4"	A36	
1	896M	L4X4X5/16	5'-7 3/4"	A36	
1	896P	L4X4X5/16	5'-9 7/16"	A36	
1	896T	L4X4X5/16	5'-9"	A36	

Romac By: _____ Checked By: _____

Beamline By: _____ Checked By: _____

ATLAS IRON WORKS

ST. LOUIS, MO.

A — FOR APPROVAL — 07/08/16

Sequence: 8 Ref. E-Plans: –

Material: A992 U.N.O. Edge Dist.: 1 1/2" U.N.O.

Holes: 13/16"DIA. Bolts: NOTED

Cleaning: NONE

Paint: NO

DFT: _____ COLOR: _____

Project: WEBSTER UNIVERSITY INTERDISCIPLINARY SCIENCE BUILDING

Customer: PARIC CORPORATION

Owner: WEBSTER UNIVERSITY

Location: WEBSTER GUOVES,MO 63119

Dwn: ZZ Date: 07/08/2016 Ckd: LJ Date: 07/08/2016

Job No. A16013 BAT: _____ DWG#: 896

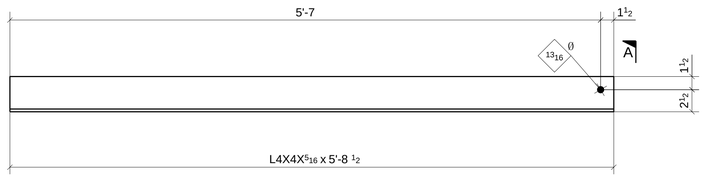

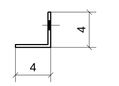

SECTION - A

ONE - ANGLE ~ 897A

(REF: E8B)

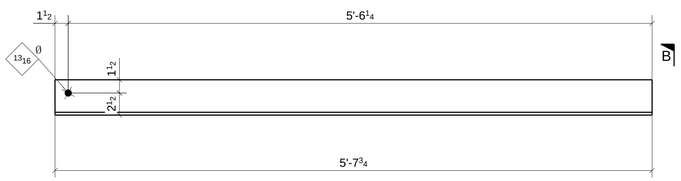

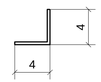

SECTION - B

ONE - ANGLE ~ 897B

(REF: E8B)

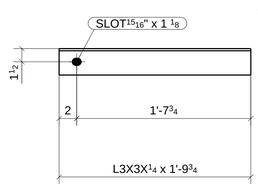

SECTION - C

ONE - ANGLE ~ 897C

(REF: E8B)

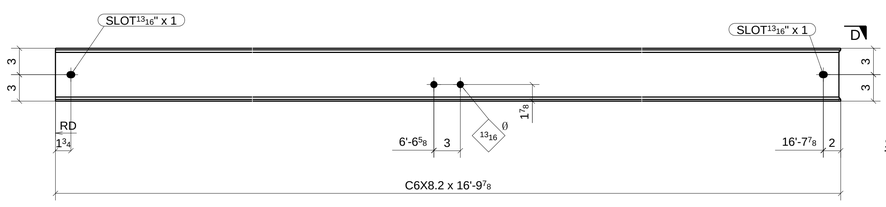

SECTION - D

ONE - LOOSE MATERIAL ~ 897D

(REF: E8C)

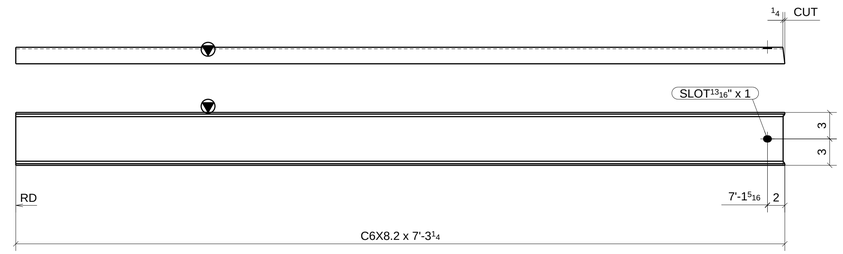

ONE - LOOSE MATERIAL ~ 897K

(REF: E8C)

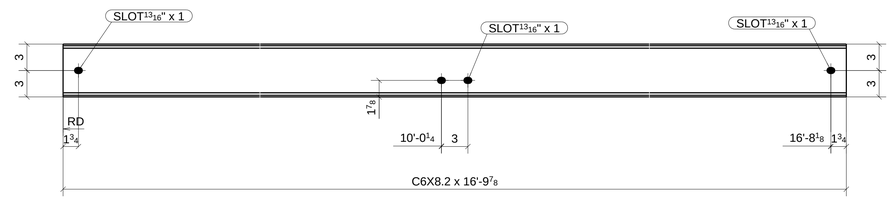

ONE - LOOSE MATERIAL ~ 897H

(REF: E8C)

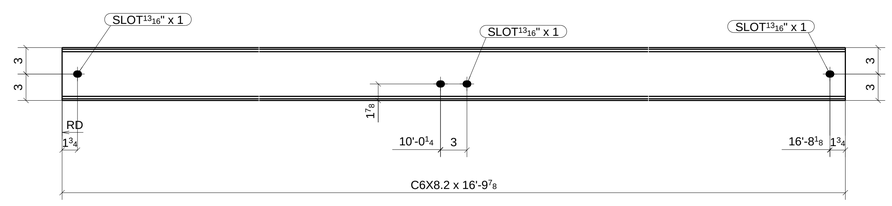

ONE - LOOSE MATERIAL ~ 897F

(REF: E8C)

MATERIAL LIST

QTY	MARK	DESCRIPTION	LENGTH	MATERIAL	NOTES
1	897A	L4X4X5/16	5'-8 1/2"	A36	
1	897B	L4X4X5/16	5'-7 3/4"	A36	
1	897C	L3X3X1/4	1'-9 3/4"	A36	
1	897D	C6X8.2	16'-9 7/8"	A992	
1	897F	C6X8.2	16'-9 7/8"	A992	
1	897H	C6X8.2	16'-9 7/8"	A992	
1	897K	C6X8.2	7'-3 1/4"	A992	

Romac By: _____ Checked By: _____

Beamline By: _____ Checked By: _____

A FOR APPROVAL 07/08/16

Sequence: 8 Ref. E-Plans: --

Material: A992 U.N.O. Edge Dist.: 1 1/2" U.N.O.

Holes: 13/16"DIA. Bolts: NOTED

Cleaning: NONE

Paint: NO

DFT: _____ COLOR: _____

ATLAS IRON WORKS

ST. LOUIS, MO.

Project: WEBSTER UNIVERSITY INTERDISCIPLINARY SCIENCE BUILDING

Customer: PARIC CORPORATION

Owner: WEBSTER UNIVERSITY

Location: WEBSTER GUOVES,MO 63119

Dwn: ZZ Date: 07/08/2016 Ckd: LJ Date: 07/08/2016

Job No. A16013 BAT: _____ DWG#: 897

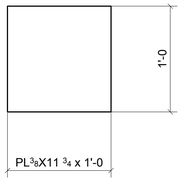

2 - PLATES ~ 898A

(REF: 0)

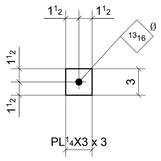

72 - PLATES ~ 898P

(REF: E8B)

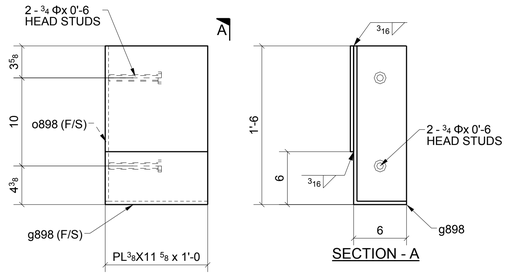

ONE - PLATE ~ 898H

(REF: E8B)

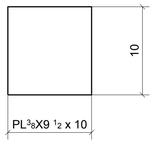

ONE - PLATE ~ 898B

(REF: 0)

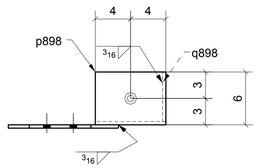

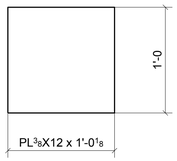

ONE - PLATE ~ 898C

(REF: 0)

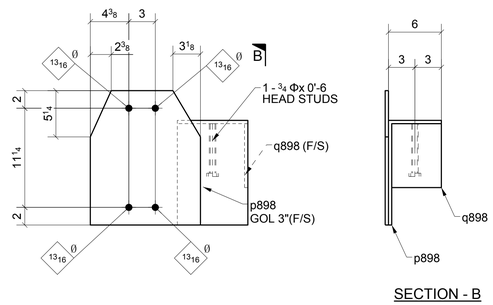

ONE - PLATE ~ 898K

(REF: E8B)

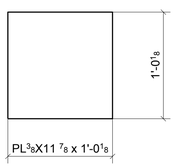

ONE - PLATE ~ 898D

(REF: 0)

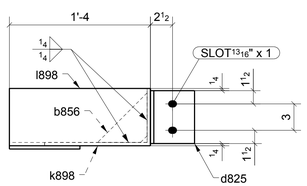

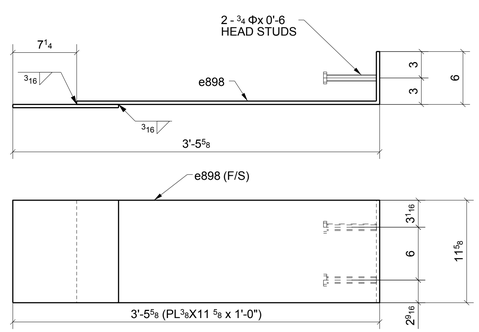

ONE - PLATE ~ 898F

(REF: E8B)

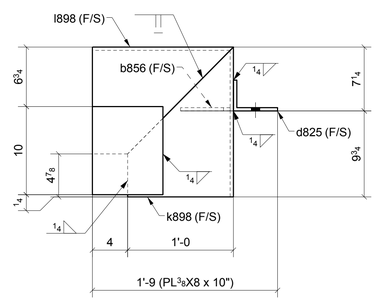

ONE - PLATE ~ 898M

(REF: E8B)

MATERIAL LIST

QTY	MARK	DESCRIPTION	LENGTH	MATERIAL	NOTES
2	898A	PL3/8"X11 3/4"	1'-0"	A36	
1	898B	PL3/8"X9 1/2"	0'-10"	A36	
1	898C	PL3/8"X12"	1'-0 1/8"	A36	
1	898D	PL3/8"X11 7/8"	1'-0 1/8"	A36	
1	898F	PL3/8"X11 5/8"	1'-0"	A36	
1	e898	BPL3/8"X11 5/8"	3'-4 3/8"	A36	
2		3/4" STUD	0'-6"		
1	898H	PL3/8"X11 5/8"	1'-0"	A36	
1	g898	BPL3/8"X11 5/8"	2'-0"	A36	
1	o898	PL3/8"X5 5/8"	1'-5 5/8"	A36	
2		3/4" STUD	0'-6"		
1	898K	PL3/8"X12 1/2"	1'-3 1/4"	A36	
1	p898	BPL3/8"X8"	1'-5 7/8"	A36	
1	q898	PL3/8"X5 5/8"	0'-7 1/4"	A36	
1		3/4" STUD	0'-6"		
1	898M	PL3/8"X8"	0'-10"	A36	
1	b856	PL3/8"X5 5/8"	0'-5 5/8"	A36	
1	d825	L5X3-1/2X3/8	0'-6"	A36	
1	k898	BPL3/8"X17"	1'-6 1/2"	A36	
1	l898	BPL3/8"X16"	1'-6 5/8"	A36	
72	898P	PL1/4"X3"	0'-3"	A36	

Romac By: _____ Checked By: _____

Beamline By: _____ Checked By: _____

A	FOR APPROVAL	07/08/16

Sequence: 8 Ref. E-Plans: –

Material: A992 U.N.O. Edge Dist.: 1 1/2" U.N.O.

Holes: 13/16"DIA. Bolts: NOTED

Cleaning: NONE

Paint: NO

DFT: _____ COLOR: _____

ATLAS IRON WORKS
ST. LOUIS, MO.

Project: WEBSTER UNIVERSITY INTERDISCIPLINARY SCIENCE BUILDING

Customer: PARIC CORPORATION

Owner: WEBSTER UNIVERSITY

Location: WEBSTER GUOVES,MO 63119

Dwn: ZZ Date: 07/08/2016 Ckd: LJ Date: 07/08/2016

Job No. A16013 BAT: _____ DWG#: 898

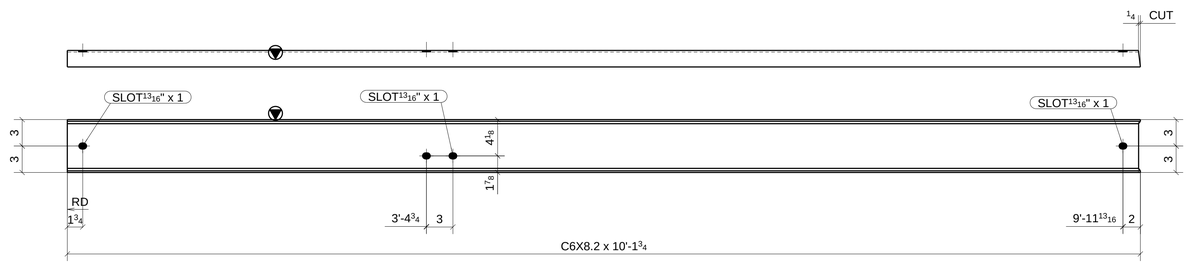

ONE - LOOSE MATERIAL ~ 899A

(REF: E8C)

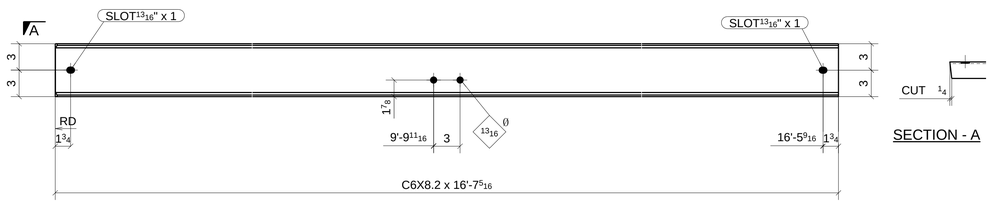

SECTION - A

ONE - LOOSE MATERIAL ~ 899B

(REF: E8C)

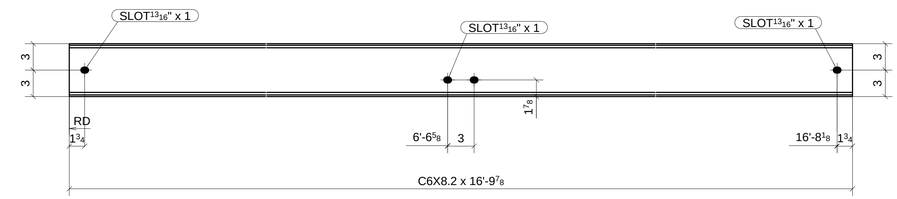

ONE - LOOSE MATERIAL ~ 899M

(REF: E8C)

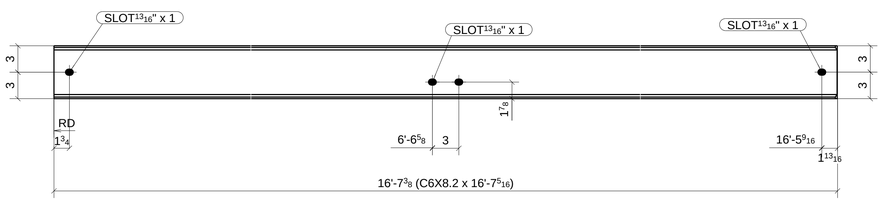

ONE - LOOSE MATERIAL ~ 899C

(REF: E8C)

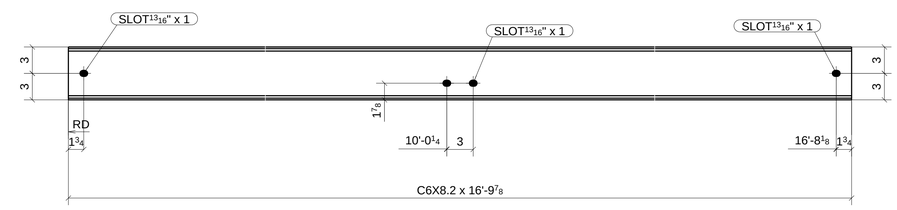

ONE - LOOSE MATERIAL ~ 899K

(REF: E8C)

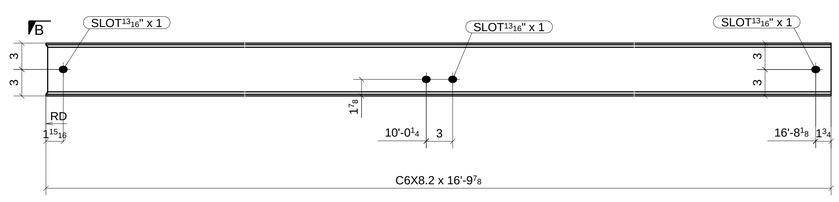

SECTION - B

ONE - LOOSE MATERIAL ~ 899D

(REF: E8C)

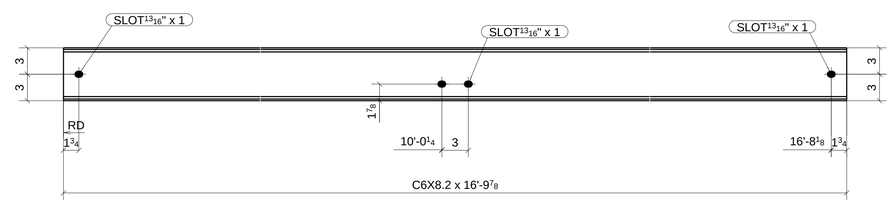

11 - LOOSE MATERIALS ~ 899H

(REF: E8C)

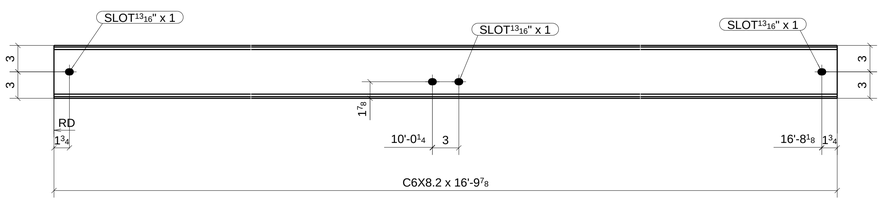

ONE - LOOSE MATERIAL ~ 899F

(REF: E8C)

FOR APPROVAL

MATERIAL LIST

QTY	MARK	DESCRIPTION	LENGTH	MATERIAL	NOTES
1	899A	C6X8.2	10'-1 3/4"	A992	
1	899B	C6X8.2	16'-7 5/16"	A992	
1	899C	C6X8.2	16'-7 5/16"	A992	
1	899D	C6X8.2	16'-9 7/8"	A992	
1	899F	C6X8.2	16'-9 7/8"	A992	
11	899H	C6X8.2	16'-9 7/8"	A992	
1	899K	C6X8.2	16'-9 7/8"	A992	
1	899M	C6X8.2	16'-9 7/8"	A992	

Romac By: _____ Checked By: _____

Beamline By: _____ Checked By: _____

A	FOR APPROVAL	07/08/16

Sequence: 8 — Ref. E-Plans: --

Material: A992 U.N.O. — Edge Dist.: 1 1/2" U.N.O.

Holes: 13/16"DIA. — Bolts: NOTED

Cleaning: NONE

Paint: NO

DFT: _____ COLOR: _____

ATLAS IRON WORKS

ST. LOUIS, MO.

Project: WEBSTER UNIVERSITY INTERDISCIPLINARY SCIENCE BUILDING

Customer: PARIC CORPORATION

Owner: WEBSTER UNIVERSITY

Location: WEBSTER GUOVES,MO 63119

Dwn: ZZ Date: 07/08/2016 Ckd: LJ Date: 07/08/2016

Job No. A16013 BAT: _____ DWG#: 899

CANNONDESIGN

SUBMITTAL IDENTIFICATION SHEET

To be completed by Contractor/CM

WEBSTER UNIVERSITY ISB
PROJECT NAME

8274 BIG BEND BLVD
ADDRESS

NUMBER

WEBSTER UNIVERSITY
OWNER

CANNON DESIGN
ARCHITECT / ENGINEER

Joe Voypick
SUBMITTED BY

051200-024
CONTRACTOR / CM SUBMITTAL NO.

CANNON DESIGN SUBMITTAL NO.

DRAWING / DETAIL REFERENCE

051200
SPECIFICATION SECTION / PARAGRAPH

Atlas Iron
MANUFACTURER / SUPPLIER

ITEM / PRODUCT ID

REQUIRED DATE

PRIORITY

CRITICAL

ITEM BEING SUBMITTED (check only one)

- (•) Shop Drawings
- ( ) Samples (_____ copies)
- ( ) LEED Submittal
- ( ) Certification / Qualifications
- ( ) Record Documents
- ( ) Product Data
- ( ) Coordination Drawing
- ( ) Calculations
- ( ) Schedules
- ( ) O&M Manuals
- ( ) Other _____

ITEM BEING SUBMITTED FOR (check only one)

- (•) Action
- ( ) Information Only
- ( ) Record

REMARKS OR DEVIATIONS

IT IS THE RESPONSIBILITY OF THE FABRICATOR TO COORDINATE THE STEEL CONNECTION DESIGNS WITH THE STEEL SHOP DRAWINGS.

CONTRACTOR / CM CERTIFICATION
(SUBMITTALS NOT CERTIFIED WILL BE RETURNED WITHOUT REVIEW)

PARIC

PARIC CORPORATION
SUBMITTAL STAMP

THIS SHOP DRAWING HAS BEEN REVIEWED BY PARIC CORPORATION

Subcontractor remains responsible for dimensions, quantities, coordination with other trades and compliance with contract documents.

By:
Devin D. Gates

Joe Voypick
REVIEWED BY

7/8/16
DATE

To be completed by Reviewer

05 1200-024
CANNON DESIGN SUBMITTAL NUMBER

7/8/16
RECEIVED DATE

( ) A. No Exceptions Taken
No further review of submittal is required.

( ) B. Make Corrections Noted
Incorporate corrections in work; resubmission is not required.

( ) C. Revise and Resubmit
Revise as noted, and resubmit for review.

( ) D. Rejected
Submittal is not in compliance with Contract Documents; provide new submittal.

( ) E. For Record / Information Only
Submittal was reviewed for Record / Information purposes only.

( ) F. Not Required for Review
Submittal is not required by Contract Documents and has not been reviewed.

Review is for conformance with the design concept of this project and for general compliance with contract documents. Contractor is responsible for quantities, dimensions and compliance with contract documents and for information that pertains to fabrication processes, construction techniques and coordination of this work with all trades which will be affected thereby. This review is null and void if submittal deviates from contract documents and does not indicate or note deviations.

A/E COMMENTS

( ) See attached sheet(s) for additional comments

SHOP DRAWING / SUBMITTAL REVIEW

- [ ] NO EXCEPTION TAKEN
- [x] EXCEPTIONS NOTED, RESUBMITTAL NOT REQUIRED
- [ ] REJECTED
- [ ] REVIEWED FOR INFORMATION ONLY
- [ ] REVISE AND RESUBMIT AS NOTED

Checking is only for general conformance with the design concept of the project and general compliance with the information given in the Contract Documents. Any action shown is subject to the requirements of the plans and specifications. Contractor is responsible for: Dimensions which shall be confirmed and correlated at the job site, fabrication processes and techniques of the construction, coordination of his work with that of all other trades and the satisfactory performance of his work.

DAVID MASON & ASSOCIATES, INC.

REVIEW BY: JYW DATE: 07/21/2016

REVIEWED BY

DATE

PARIC
EXPERIENCE. EXCELLENCE.
77 Westport Plaza
Suite 250
St. Louis, MO 63146

TRANSMITTAL

No. 15051-0131

Paric Corporation

PROJECT: 15051-Webster University Interdisciplinary Science Building

DATE: 07/08/2016

TO: Cannon Design
1100 Clark Ave
St Louis MO 63102

RE: Webster Seq 8 Steel

ATTN: Kelvin Patel

JOB: 15051

WE ARE SENDING:	SUBMITTED FOR:	ACTION TAKEN:
☑ Shop Drawings	☑ Approval	☐ Approved as Submitted
☐ Letter	☐ Your Use	☐ Approved as Noted
☐ Prints	☐ As Requested	☐ Returned After Loan
☐ Change Order	☐ Review and Comment	☐ Resubmit
☐ Plans		☐ Submit
☐ Samples	**SENT VIA:**	☐ Returned
☐ Specifications	☐ Attached	☐ Returned for Corrections
☐ Other:	☐ Separate Cover Via:	☐ Due Date:

Item	*Package*	*Code*	*Rev.*	*Copies*	*Date*	*Description*	*Status*
Submittal		051200-024	1		07/08/2016	Webster Seq 8 Steel	Submitted

NOTES:

CC:

Signed: _____
Devin Gates